Ms. Kathe Ahmed
Project Manager
Office of Alternative Delivery
Georgia Department of Transportation
600 West Peachtree Street, Suite 1550
Atlanta, GA 30308

Arcadis U.S., Inc.
2410 Paces Ferry Road
#400
Atlanta
Georgia 30339
Tel 770 431 8666
Fax 770 435 2666
www.arcadis.com

Subject:
PI 0017219, Walton & Newton Counties, US 278 Widening
Pavement Design Report Submittal QA/QC Certification

INFRASTRUCTURE

Date:

July 6, 2022

Dear Ms. Ahmed,

I certify as the Design Manager for the above-referenced project that the submitted Pavement Designs for the US 278 Widening and I-20 Ramps prepared by ARCADIS have been created in accordance with the Georgia DOT standards and have been reviewed in accordance with ARCADIS' Design Quality Management Plan.

Sincerely,

Contact:

Tyler Denning

Phone:

404.245.7272

Email:

Tyler.denning@arcadis.com

ARCADIS U.S., Inc.
Tyler Denning
Design Manager

Our ref:

30109875

Copies:

File

Enclosures:
1. 0017219_Pavement Design Report _R04

PI 0017219: US278 Widening (Project Adventure)

Response to OMAT Comments on Pavement Design

PI No.	**0017219**	**Design Year**	**2044**
Project Manager	**Kathe Ahmed**	**Construction Time (Months)**	**12 months**
County	**Newton & Walton**	**Management Let Date**	**08/31/2022**
Flexible Full Depth Design	**2**	**Pavement Evaluation Summary**	**N/A, waived**
Rigid Full Depth Design	**2**	**Traffic Diagrams**	**Approved, 06/09/2022**
Temporary Design	**0**	**Soil Survey Summary**	**N/A**

General Comments

1. ***The Project Description state that a PES was waived, but the PES Waiver letter or email was not included in the package for reference.***

   Arcadis Response:
   Email correspondence waiving the PES included in the submission, refer to Attachment 5.

2. ***The Project Description states that the "thickness of the existing pavement cannot be reduced" and the overlay "would be mainly intended for striping revisions." However, the typical sections show both milling at variable depths and asphalt leveling. If the overlay is only intended for striping revisions, only a surface course is allowed. Instead, the project description should state: "minimal changes will be made to the pavement structure."***

   Arcadis Response:
   Amended as follows:
   "Overlays are permitted by TPs, however, minimal changes will be made to the existing pavement structure. Milling and leveling are intended for small profile corrections and striping revisions and will be non-structural in nature. Moreover, the length of continuous overlay would be less than 1/4 mile and would be mainly intended for the striping revision".

3. ***The Design Factors section has the Open Year as 2025, but with a Let date of 2022 and 10 months of construction, the Open Year would be 2023. Please address the discrepancy with the normal open year being the Let date + Construction duration. If the Let Date is to let to DB but not starting construction, please detail the start of construction.***

   Arcadis Response:
   Amended.
   Management Let date is 08/31/2022, with a design period of 9-months starting in Q3/Q4 2022, and a construction duration of 12 months starting in Q2, 2023, and the facility will be open to traffic in Q2, 2024.

4. ***The Design Factors section does not include the route priority for each design.***

   Arcadis Response:
   Amended to include the details of I-20 Ramps.

5. ***The typical sections have the ramps labeled incorrectly; they should be "I-20" ramps not "US 278."***

   Arcadis Response:
   Amended the description.

6. ***A please detail a design for Willow Spring Church Road, as it is full depth in the plans provided for more than 1,000 feet and there is no design for this road specified.***

   Arcadis Response:
   Amended as follows:
   "Willow Spring Church Road and Driveway-1 is utilizing the minor pavement designs and thus does not require an approved design".

Pavement Design Package Submittal Checklist (Consultant)

PI Number: 0017219

County: Newton and Walton

Management Let Date: 08/31/2022

GDOT Project Manager: Kathe Ahmed

Design Phase Leader: Tyler Denning

Construction Duration (months): 12

Package Submittal Date: 07/06/2022

Pavement Design Package shall be one combined PDF, with bookmarks for each item, in the order listed below, and submitted in accordance with the ProjectWise Pavement Design Submission and Approval Process. If the PDF is secured it shall have signature fields pre-applied for all required signatures, allow printing, commenting, filling in form fields, and signing existing signature fields. Screen shots of PDF security settings located here. For further information on signing documents in ProjectWise see the Process for Digitally Signing Documents in Bluebeam Revu

1) Quality Assurance (QA)
   - ☒ Letter signed by DPL detailing the QA that has been performed in this package

2) Project Description
   - ☒ A Detailed Pavement Project Description (see attached Appendix A for an example)

3) Design Analyses
   - 2 (#) Full Depth Rigid Pavement Designs
   - 2 (#) Full Depth Flexible Pavement Designs
   - 0 (#) Temporary Pavement Designs
   - Inlay/Overlay Designs are approved in a PES and should not be included
   - PES was waived by GDOT on 05/12/2022

4) Traffic **(include approval letter if done by consultant)**
   - ☒ Build Traffic Diagrams **(AADT Build Only, No DHV)**
   - ☐ Existing Traffic Diagrams for temporary pavements
   - ☐ Traffic Assignment Letter – For Bridge Projects if no traffic diagrams are available
   - ☐ Roundabout Traffic Tool for Pavement Design Output – **For all Roundabouts**

5) Plan Sheets (Full Size, Half Size, or 11" X 17" PDF)
   - ☒ Cover
   - ☒ Typical Sections
   - ☐ Staging Typical Sections for temporary pavements
   - ☒ Construction Sheets Section 13

6) Reports and Summaries
   - ☒ Current Preconstruction Status Report
   - ☐ Soil Survey Summary Report **(include approval letter if done by consultant)**
   - ☐ GDOT's VE Study Implementation Correspondence

Note: Missing items, inaccurate, or incomplete submission of Pavement Design Package could result in rejection of the submittal.

Designer (Prepare): _____

Design Phase Leader (QC): Tyler Denning

Digitally signed by Tyler Denning
DN: C=US, E=tyler.denning@arcadis.com, O=Arcadis, OU=PDE, CN=Tyler Denning
Reason: I agree to the terms defined by the placement of my signature on this document
Contact Info: tyler.denning@arcadis.com cell 404-245-7272
Date: 2022.07.06 13:27:59-04'00'

State Roadway Design Engineer (QA): _____
(Only include with In-House, Consultants provide QA letter in package instead)

State Pavement Engineer (Approve): _____ 2022.07.07 15:09:25-04'00'

Pavement Design Report
PI 0017219 – Widening of US 278
Newton and Walton Counties

Project Description

Georgia Department of Transportation (GDOT) is in project development for PI Nos. 0017129, 0018363, and 0018361, whose combined efforts encompass the overall roadway infrastructure improvements for the larger "Project Adventure". These PIs will be procured through GDOT's Office of Alternative Delivery (OAD) using Design Build (DB) methods. There will be two DB Project, with PIs 0017219 and 0018363 being released together as the first DB project, and then with PI 0018361 being released as a separate, second DB project.

PI 0017219 – US 278 at I-20:

This project proposes capacity and operational improvements to SR 12 / US 278 in Newton and Walton Counties, Georgia. The project proposes widening the existing 2-lane section as well as performing intersection improvements to the eastbound and westbound I-20 ramp terminals, US 278 at Shire Parkway, and a new location signal at the intersection of US 278 and PI 0018363 – Frontage Road. This project begins approximately 2,200 feet south of the I-20 EB ramp intersection and extends north approximately 1.36 miles, terminating just north of Willow Springs Church Road. Existing right-of-way is 70 feet to 125 feet and proposed right-of-way is 80 to 180 feet.

PES was waived by GDOT on 05/12/2022. Overlays are permitted by TPs, however, minimal changes will be made to the existing pavement structure. Milling and leveling are intended for small profile corrections and striping revisions and will be non-structural in nature. Moreover, the length of continuous overlay would be less than 1/4 mile and would be mainly intended for the striping revision.

Design Factors

- Let Date: **08/15/2022** (Includes 9-month design period starting in Q3/Q4 2022, 12-month construction period, starting Q2 2023, and open to traffic in Q2 2024
- Open Year: 2024, Design Year 2024 – 2044
- Open Year +2: 2026, **Design Year +2: 2026 – 2046**
- Soil Survey: Will be done by DB team
- Soil Support Value (SSV):
  - Newton 2.5
  - Walton 3.0
  - Value of **2.5** was used in the design
- Regional Factor (RF): **1.6**
- Lane Distribution Factor (%):
  - US 278: **100%**

- I -20 Ramps**: 100%**
- Terminal Serviceability Index: **2.5**
- State Route Prioritization Category:
  - US 278: **Medium (Minor Arterial)**
  - I-20 Ramps: **High**

Note:
Willow Spring Church Road and Driveway-1 is utilizing the minor pavement designs and thus does not require an approved design.

Flexible Pavement Design: (Design Traffic)

Section #	Name of the Section	Total Traffic		Total Traffic	
		2024	2044	2026	2046
F-1	US 278 - (from south of Shire Pkwy - Beyond Willow Springs Church Rd)	17350	19550	17500	19850

Rigid Pavement Design: (Design Traffic)

Section #	Name of the Section	Total Traffic		Total Traffic	
		2024	2044	2026	2046
R1	I-20 On & Off Ramps	7450	9025	7600	9225

Truck Percentages:

Section	2024			2044			Adopted Truck % in design*		
	SU Truck	CU Truck	Total Truck	SU Truck	CU Truck	Total Truck	SU Truck	CU Truck	Total Truck
US 278 - (from south of Shire Pkwy - Beyond Willow Springs Church Rd)	3.0%	5.5%	8.5%	2.0%	2.5%	4.5%	2.5%	3.0%	5.5%
I-20 On & Off Ramps	4.0%	6.5%	10.5%	2.5%	3.0%	5.5%	3.0%	3.5%	6.5%

***Note:**

To optimize the design, weighted average of the truck percentages was considered in the design to accommodate the higher truck percentage during the initial year (2024), and once the Old Mill Interchange (PI0018361) is constructed and opened for traffic in 2025, the travel pattern is modified and hence the change in the truck percentages, as compared to the initial year, 2024.

Flexible Pavement Thickness: Design Year 2024-2044: (*All thicknesses are in inches*)

Section Name	Thickness	Material	Under design %
US 278 (Shire Pkwy to north of Willow Springs Church Rd)	1.5	RECYCLED ASPH CONC 12.5 MM SUPERPAVE, GP 2 ONLY, INCL BITUM MATL & H LIME	6.76
	2	RECYCLED ASPH CONC 19 MM SUPERPAVE, GP 1 OR 2,INCL BITUM MATL & H LIME	
	5	RECYCLED ASPH CONC 25 MM SUPERPAVE, GP 1 OR 2, INCL BITUM MATL & H LIME	
	12	GR AGGR BASE CRS, INCL MATL	

Flexible Pavement Thickness: Design Year 2026-2046: (*All thicknesses are in inches*)

Section Name	Thickness	Material	Under design %
US 278 (Shire Pkwy to north of Willow Springs Church Rd)	1.5	RECYCLED ASPH CONC 12.5 MM SUPERPAVE, GP 2 ONLY, INCL BITUM MATL & H LIME	7.02
	2	RECYCLED ASPH CONC 19 MM SUPERPAVE, GP 1 OR 2,INCL BITUM MATL & H LIME	
	5	RECYCLED ASPH CONC 25 MM SUPERPAVE, GP 1 OR 2, INCL BITUM MATL & H LIME	
	12	GR AGGR BASE CRS, INCL MATL	

Rigid Pavement Thickness: Design Year 2024-2044: (*All thicknesses are in inches*)

Section Name	Thickness	Material	Over design (%)
I-20 On & Off Ramps	10	JPCP	10.55
	3	RECYCLED ASPH CONC 19 MM SUPERPAVE, GP 1 OR 2,INCL BITUM MATL & H LIME	
	8	GR AGGR BASE CRS, INCL MATL	

Rigid Pavement Thickness: Design Year 2026-2046: (*All thicknesses are in inches*)

Section Name	Thickness	Material	Over design (%)
I-20 On & Off Ramps	10	JPCP	9.83
	3	RECYCLED ASPH CONC 19 MM SUPERPAVE, GP 1 OR 2,INCL BITUM MATL & H LIME	
	8	GR AGGR BASE CRS, INCL MATL	

Attachment 1 – Pavement Design Sheets

Flexible Pavement Design Analysis

PI Number	0017219	**County(s)**	Newton & Walton
Project Number	US 278	**Design Name**	US 278 (Shire Pkwy - north of WSC)
Project Description			

Traffic Data (AADTs are one-way)						**Miscellaneous Data**	
Initial Design Year	2024	**Initial AADT, VPD**	8,675	**24 Hour Truck %**	5.50	**Lanes in one direction**	1
Final Design Year	2044	**Final AADT, VPD**	9,775	**SU Truck %**	2.50	**Curb & Gutter/Barrier**	No
		Mean AADT, VPD	9,225	**MU Truck %**	3.00		

Design Data					
Lane Distribution Factor (%)	100.00	**Soil Support Value**	2.50	**Single Unit ESAL**	0.40
Terminal Serviceability Index	2.50	**Regional Factor**	1.60	**Multiple Unit ESAL**	1.50
		User Defined 18-KIP ESAL	0.00	**Calculated 18-KIP ESAL**	1.00
Non-Standard Value Comment					

Design Loading (Calculated 18-KIP ESAL)					
Mean AADT, VPD	**LDF (%)**	**Vehicle Type**	**Volume (%)**	**ESAL Factor**	**Daily ESAL**
9,225	100.00	Single Unit Truck	2.50	0.40	93
		Multi Unit Truck	3.00	1.50	416
				Total Daily ESALs	509
				Total Design Period ESALs	3,715,700

Proposed Flexible Full Depth Pavement Structure				
Course	**Material**	**Thickness (inches)**	**Structural Coefficient**	**Structural Value**
Course 1	12.5 mm Superpave	1.50	0.4400	0.66
Course 2	19 mm Superpave	2.00	0.4400	0.88
Course 3	25 mm Superpave	1.00	0.4400	0.44
		4.00	0.3000	1.20
Course 4	Graded Aggregate Base	12.00	0.1600	1.92

Required SN	5.47	**Proposed pavement is 6.76% Underdesigned**	**Proposed SN**	5.10

Design Remarks	US 278 (From Shire Pkwy to North of Willow Springs Church Rd) (2024-2044)

Prepared By 6/7/2022 6:40 AM

Harish Karmungi **Date**

Recommended By

Consultant Design Phase Leader **Date**

Approved By

State Pavement Engineer **Date**

Flexible Pavement Design Analysis

PI Number	0017219	**County(s)**	Newton & Walton
Project Number	US 278	**Design Name**	US 278 (2026-2046)
Project Description			

Traffic Data (AADTs are one-way)						**Miscellaneous Data**	
Initial Design Year	2026	**Initial AADT, VPD**	8,750	**24 Hour Truck %**	5.50	**Lanes in one direction**	1
Final Design Year	2046	**Final AADT, VPD**	9,925	**SU Truck %**	2.50	**Curb & Gutter/Barrier**	No
		Mean AADT, VPD	9,338	**MU Truck %**	3.00		

Design Data					
Lane Distribution Factor (%)	100.00	**Soil Support Value**	2.50	**Single Unit ESAL**	0.40
Terminal Serviceability Index	2.50	**Regional Factor**	1.60	**Multiple Unit ESAL**	1.50
		User Defined 18-KIP ESAL	0.00	**Calculated 18-KIP ESAL**	1.00
Non-Standard Value Comment					

Design Loading (Calculated 18-KIP ESAL)					
Mean AADT, VPD	**LDF (%)**	**Vehicle Type**	**Volume (%)**	**ESAL Factor**	**Daily ESAL**
9,338	100.00	Single Unit Truck	2.50	0.40	94
		Multi Unit Truck	3.00	1.50	421
				Total Daily ESALs	515
				Total Design Period ESALs	3,759,500

Proposed Flexible Full Depth Pavement Structure				
Course	**Material**	**Thickness (inches)**	**Structural Coefficient**	**Structural Value**
Course 1	12.5 mm Superpave	1.50	0.4400	0.66
Course 2	19 mm Superpave	2.00	0.4400	0.88
Course 3	25 mm Superpave	1.00	0.4400	0.44
		4.00	0.3000	1.20
Course 4	Graded Aggregate Base	12.00	0.1600	1.92

Required SN	5.49	**Proposed pavement is 7.02% Underdesigned**	**Proposed SN**	5.10

Design Remarks	US 278 (From Shire Pkwy to North of Willow Springs Church Rd) (2026-2046)

Prepared By 6/7/2022 6:41 AM

Harish Karmungi **Date**

Recommended By

Consultant Design Phase Leader **Date**

Approved By

State Pavement Engineer **Date**

Filename: https://arcadiso365-my.sharepoint.com/personal/harish_karmungi_arcadis-us_com/Documents/Projects/30109875/Pavement Design/0017219/0017219 - P
GDOT Pavement Design Tool - Version 2.0

Rigid Pavement Design Analysis

PI Number	0017219	**County(s)**	Newton & Walton
Project Number	US 278	**Design Name**	I-20 On & off Ramps (2024-2044)
Project Description			
Section Location	I-20 On & Off Ramps	**Type Section**	JPCP

Begin Section Station	0+000	**End Section Station**	4+50	**Section Length**	450

Traffic Data (AADTs are one-way)						**Miscellaneous Data**	
Initial Design Year	2024	**Initial AADT, VPD**	7,450	**24 Hour Truck %**	6.50	**Lanes in one direction**	2
Final Design Year	2044	**Final AADT, VPD**	9,025	**SU Truck %**	3.00	**Curb & Gutter/Barrier**	No
		Mean AADT, VPD	8,238	**MU Truck %**	3.50	**Interstate**	Yes

Design Loading (Calculated 18-KIP ESAL)					
Mean AADT, VPD	**LDF (%)**	**Vehicle Type**	**Volume (%)**	**ESAL Factor**	**Daily ESAL**
8,238	100	Other Vehicles	93.50	0.004	31
		Single Unit Truck	3.00	0.500	124
		Multi Unit Truck	3.50	2.680	773
				Total Daily ESALs	928
				Total Design Period ESALs	6,774,400

Design Data							
Terminal Serviceability Index (P_t)	2.50	**Working Stress (psi)**	450	**Modulus of Elasticity (psi)**	3,200,000		
Soil Support Value	2.50	**Subgrade Modulus (k)**	130	**Subbase Modulus (k_1)**	175	**Subbase Modulus (k_{eff})**	220
Trial Depth of PCC Pavement (inches)	10.00	**Calculated Stress from Equation (psi)**	407.06				
% Understressed	9.54	**% Overdesigned**	10.55	**Balanced Thickness (inches)**	9.45		
Non-Standard Value Comment							

Proposed Rigid Pavement Structure	
Material	**Thickness (inches)**
JPCP - Jointed Portland Cement Concrete Pavement	10.00
19 mm Superpave Asphaltic Concrete Interlayer	3.00
Graded Aggregate Base	8.00

JPCP - Dowel Bar Size and Spacing
Refer to GDOT Standard 5046H: Joint Details for Portland Cement Concrete Paving

Design Remarks	I-20 On & Off Ramps (2024-2044)

Prepared By 6/7/2022 5:38 AM

Harish Karmungi **Date**

Recommended By

Consultant Design Phase Leader **Date**

Approved By

State Pavement Engineer **Date**

Filename: https://arcadiso365-my.sharepoint.com/personal/harish_karmungi_arcadis-us_com/Documents/Projects/30109875/Pavement Design/0017219/0017219 - P
GDOT Pavement Design Tool - Version 2.0

Rigid Pavement Design Analysis

PI Number	0017219	**County(s)**	Newton & Walton
Project Number	US 278	**Design Name**	I-20 On & Off Ramps (2026-2046)
Project Description			
Section Location	I-20 On & Off Ramps	**Type Section**	JPCP

Begin Section Station	0+000	**End Section Station**	4+50	**Section Length**	450

Traffic Data (AADTs are one-way)						**Miscellaneous Data**	
Initial Design Year	2026	**Initial AADT, VPD**	7,600	**24 Hour Truck %**	6.50	**Lanes in one direction**	2
Final Design Year	2046	**Final AADT, VPD**	9,225	**SU Truck %**	3.00	**Curb & Gutter/Barrier**	No
		Mean AADT, VPD	8,413	**MU Truck %**	3.50	**Interstate**	Yes

Design Loading (Calculated 18-KIP ESAL)					
Mean AADT, VPD	**LDF (%)**	**Vehicle Type**	**Volume (%)**	**ESAL Factor**	**Daily ESAL**
8,413	100	Other Vehicles	93.50	0.004	32
		Single Unit Truck	3.00	0.500	127
		Multi Unit Truck	3.50	2.680	790
				Total Daily ESALs	949
				Total Design Period ESALs	6,927,700

Design Data							
Terminal Serviceability Index (P_t)	2.50	**Working Stress (psi)**	450	**Modulus of Elasticity (psi)**	3,200,000		
Soil Support Value	2.50	**Subgrade Modulus (k)**	130	**Subbase Modulus (k_1)**	175	**Subbase Modulus (k_{eff})**	220
Trial Depth of PCC Pavement (inches)	10.00	**Calculated Stress from Equation (psi)**	409.73				
% Understressed	8.95	**% Overdesigned**	9.83	**Balanced Thickness (inches)**	9.49		
Non-Standard Value Comment							

Proposed Rigid Pavement Structure	
Material	**Thickness (inches)**
JPCP - Jointed Portland Cement Concrete Pavement	10.00
19 mm Superpave Asphaltic Concrete Interlayer	3.00
Graded Aggregate Base	8.00

JPCP - Dowel Bar Size and Spacing
Refer to GDOT Standard 5046H: Joint Details for Portland Cement Concrete Paving

Design Remarks	I-20 On & Off Ramps (2026-2046)

Prepared By 6/7/2022 5:44 AM

Harish Karmungi **Date**

Recommended By

Consultant Design Phase Leader **Date**

Approved By

State Pavement Engineer **Date**

Filename: https://arcadiso365-my.sharepoint.com/personal/harish_karmungi_arcadis-us_com/Documents/Projects/30109875/Pavement Design/0017219/0017219 - P
GDOT Pavement Design Tool - Version 2.0

Attachment 2 – Traffic Approval Memo and Diagrams

Georgia Department of Transportation

Interoffice Memo

FILE: Newton, Walton & Morgan Counties
P.I. # 0017219, 0018363, & 0018361

DATE: June 9, 2022

FROM: Matt Markham, Deputy Director of Planning

TO: Darryl VanMeter, Office of Innovative Delivery
Attention: Kathe Ahmed

SUBJECT: **Reviewed** Traffic Forecast Report for US 278 improvements, Frontage Road between US 278 and Old Mill Road, Old Mill Road interchange

Per request, we have reviewed the consultant's design traffic forecast for the above project. Based on the information furnished, we find the design traffic forecast to be satisfactory, and the design traffic forecasting task to be complete for the above project. The reviewed and approved design traffic forecast for the above project is attached in 0017219_0018363_0018361_10.pdf and 0017219_0018363_0018361_10.dgn.

If you have any questions concerning this information please contact Andre Washington at 404-631-1925.

Keith McCage
HNTB
Design Traffic Consultant to GDOT
404-946-5731

MM/KAM

COUNTY	STATE	PROJECT NUMBER	SHEET NO.	TOTAL SHEETS
MORGAN, NEWTON, WALTON	GA	PI 0017219 & PI 0018363	67	334

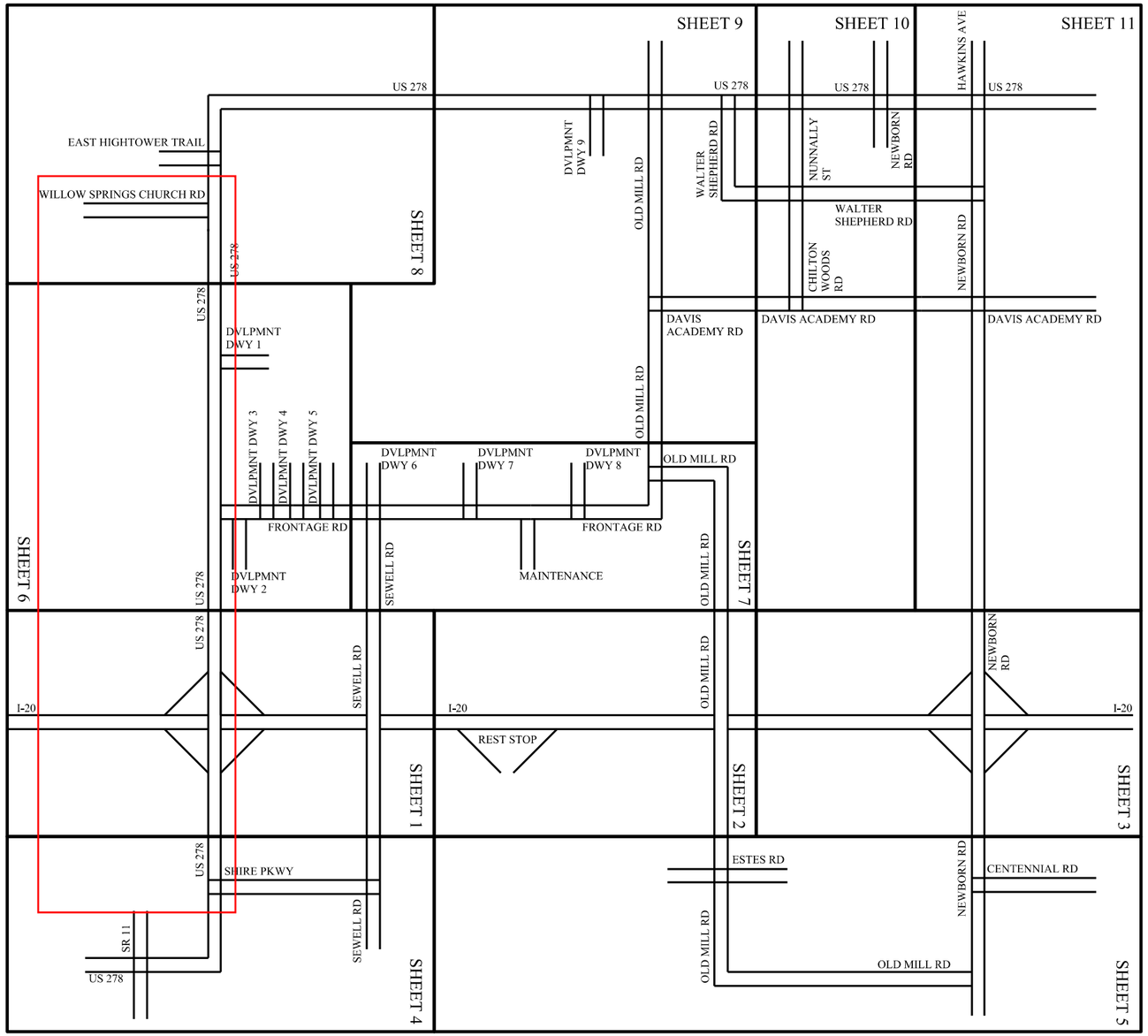

REVISION DATES		

STATE OF GEORGIA
DEPARTMENT OF TRANSPORTATION
OFFICE OF PLANNING
TRAFFIC DIAGRAM
PROJECT ADVENTURE

PROJECT 1 OPEN YEAR BUILD LAYOUT
SHEET 1 OF 1

DRAWING No. 10-0067

ARCADIS Design & Consultancy for natural and built assets

COUNTY	STATE	PROJECT NUMBER	SHEET NO.	TOTAL SHEETS
MORGAN, NEWTON, WALTON	GA	PI 0017219 & PI 0018363	68	334

AADT VOLUMES
PRJ 1 OPEN YEAR 2024
BUILD
AADT = XXX

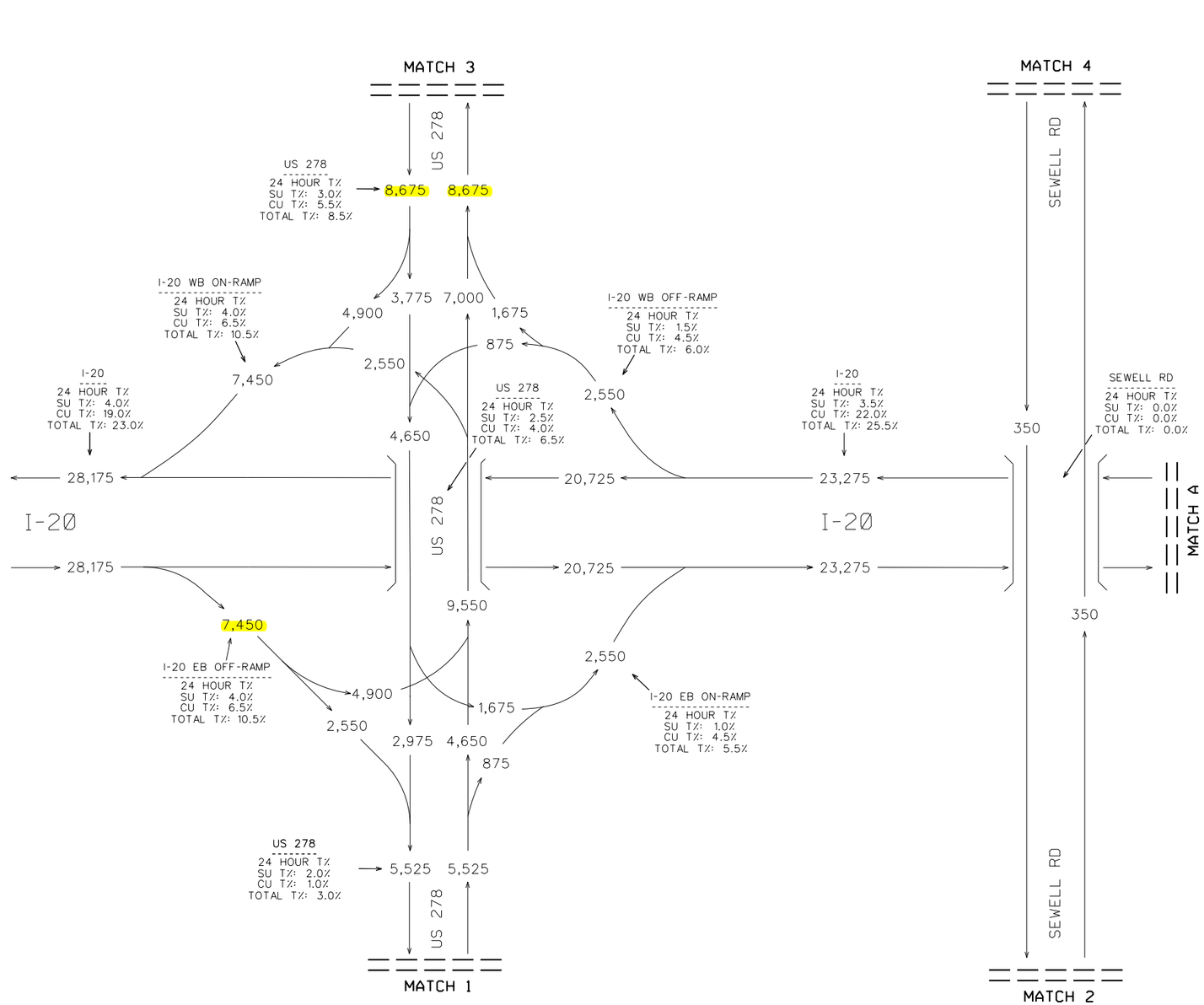

REVISION DATES		

STATE OF GEORGIA
DEPARTMENT OF TRANSPORTATION
OFFICE OF PLANNING
TRAFFIC DIAGRAM
PROJECT ADVENTURE

PRJ 1 OPEN YEAR 2024 BUILD AADT
SHEET 1 OF 11

DRAWING No.
10-0068

COUNTY	STATE	PROJECT NUMBER	SHEET NO.	TOTAL SHEETS
MORGAN, NEWTON, WALTON	GA	PI 0017219 & PI 0018363	71	334

AADT VOLUMES
PRJ 1 OPEN YEAR 2024
BUILD
AADT = XXX

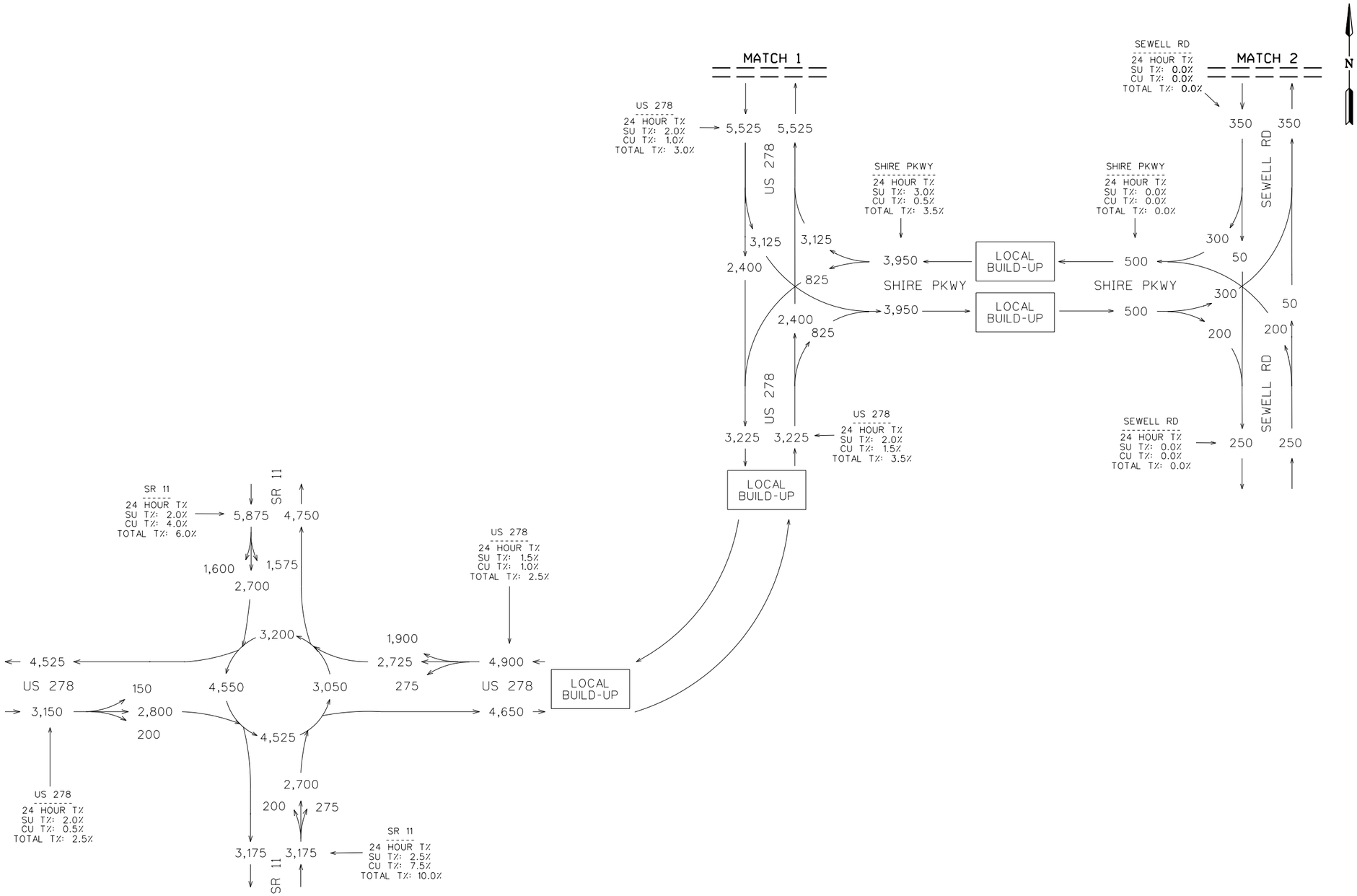

REVISION DATES		

STATE OF GEORGIA
DEPARTMENT OF TRANSPORTATION
OFFICE OF PLANNING
TRAFFIC DIAGRAM
PROJECT ADVENTURE

PRJ 1 OPEN YEAR 2024 BUILD AADT
SHEET 4 OF 11

DRAWING No.
10-0071

COUNTY	STATE	PROJECT NUMBER	SHEET NO.	TOTAL SHEETS
MORGAN, NEWTON, WALTON	GA	PI 0017219 & PI 0018363	73	334

AADT VOLUMES
PRJ 1 OPEN YEAR 2024
BUILD
AADT = XXX

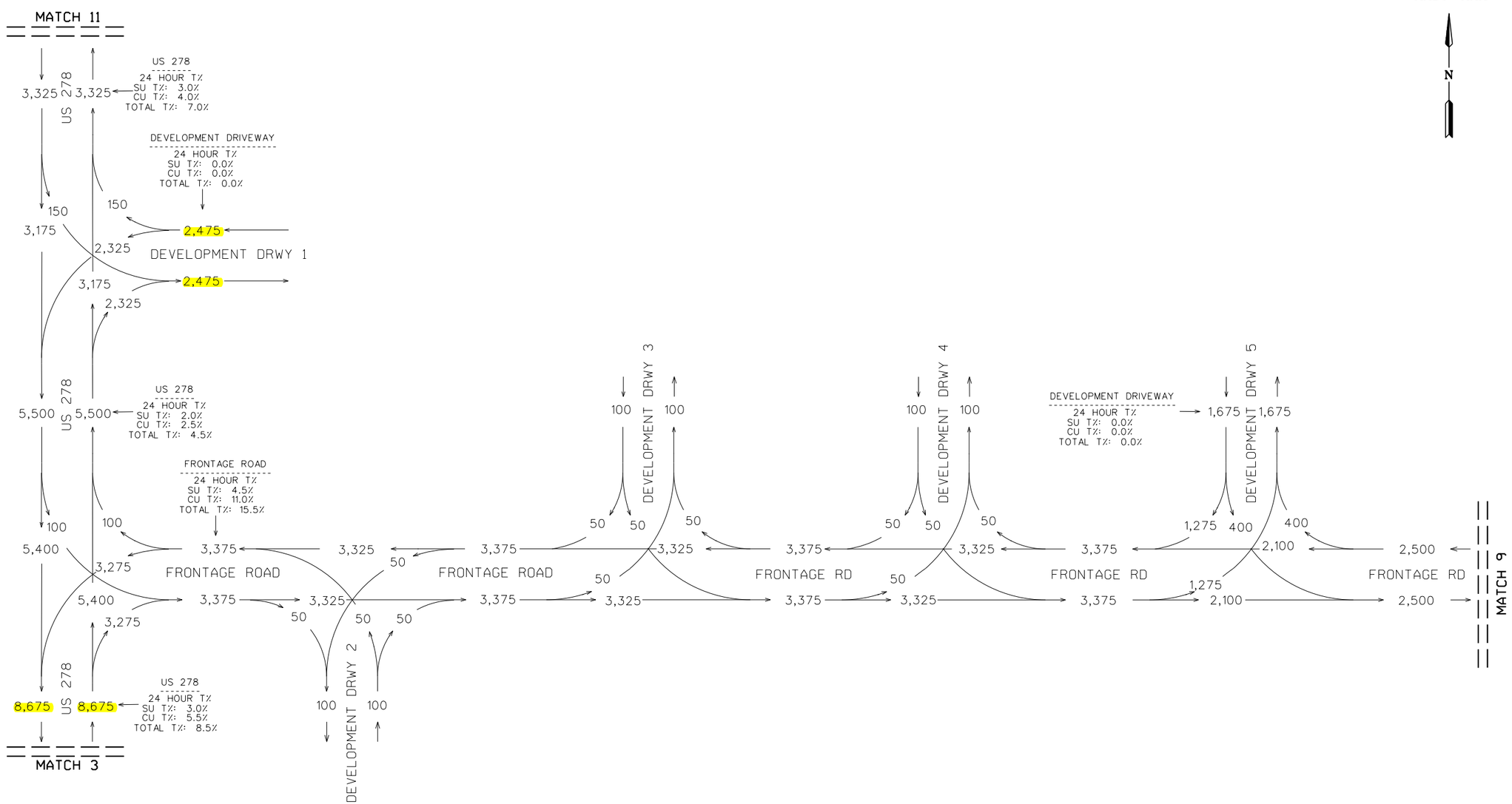

REVISION DATES		

STATE OF GEORGIA
DEPARTMENT OF TRANSPORTATION
OFFICE OF PLANNING
TRAFFIC DIAGRAM
PROJECT ADVENTURE

PRJ 1 OPEN YEAR 2024 BUILD AADT
SHEET 6 OF 11

DRAWING No.
10-0073

COUNTY	STATE	PROJECT NUMBER	SHEET NO.	TOTAL SHEETS
MORGAN, NEWTON, WALTON	GA	PI 0017219 & PI 0018363	75	334

AADT VOLUMES
PRJ 1 OPEN YEAR 2024
BUILD
AADT = XXX

N

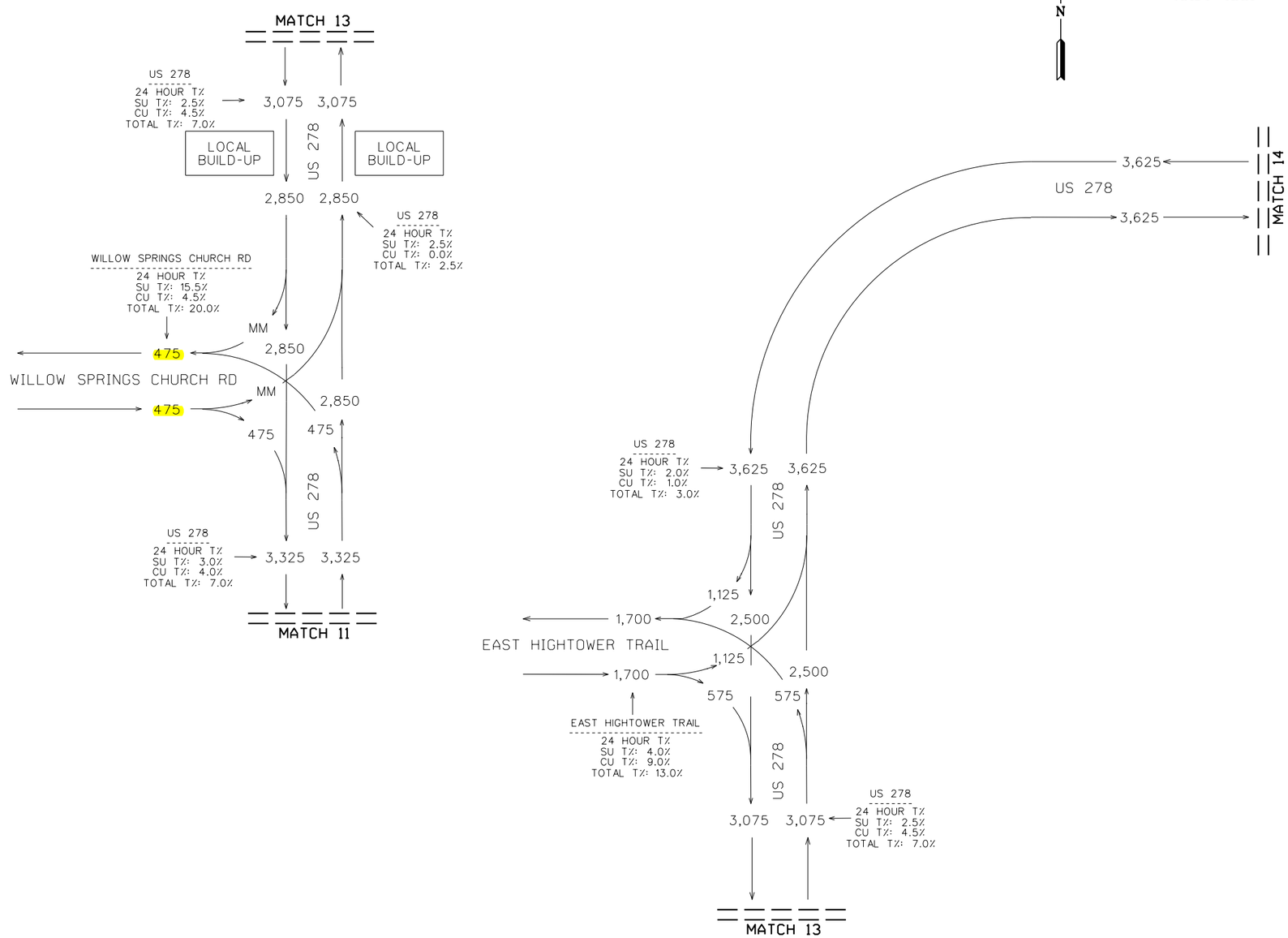

REVISION DATES		

STATE OF GEORGIA
DEPARTMENT OF TRANSPORTATION
OFFICE OF PLANNING
TRAFFIC DIAGRAM
PROJECT ADVENTURE

PRJ 1 OPEN YEAR 2024 BUILD AADT
SHEET 8 OF 11

DRAWING No.
10-0075

COUNTY	STATE	PROJECT NUMBER	SHEET NO.	TOTAL SHEETS
MORGAN, NEWTON, WALTON	GA	PI 0017219 & PI 0018363	77	334

AADT VOLUMES
PRJ 1 OPEN YEAR 2024
BUILD
AADT = XXX

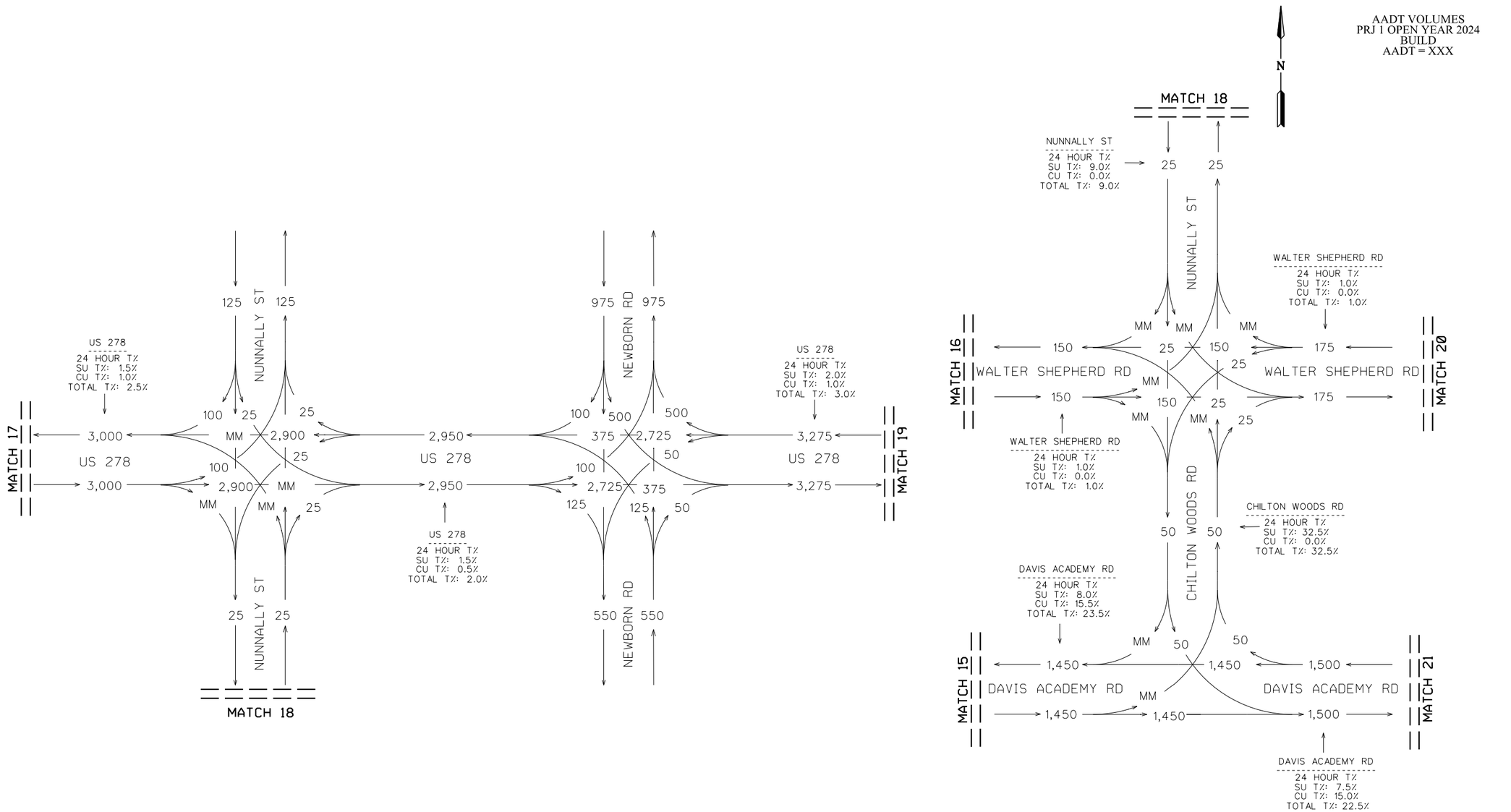

REVISION DATES		

STATE OF GEORGIA
DEPARTMENT OF TRANSPORTATION
OFFICE OF PLANNING
TRAFFIC DIAGRAM
PROJECT ADVENTURE

PRJ 1 OPEN YEAR 2024 BUILD AADT
SHEET 10 OF 11

DRAWING No.
10-0077

COUNTY	STATE	PROJECT NUMBER	SHEET NO.	TOTAL SHEETS
MORGAN, NEWTON, WALTON	GA	PI 0017219 & PI 0018363	90	334

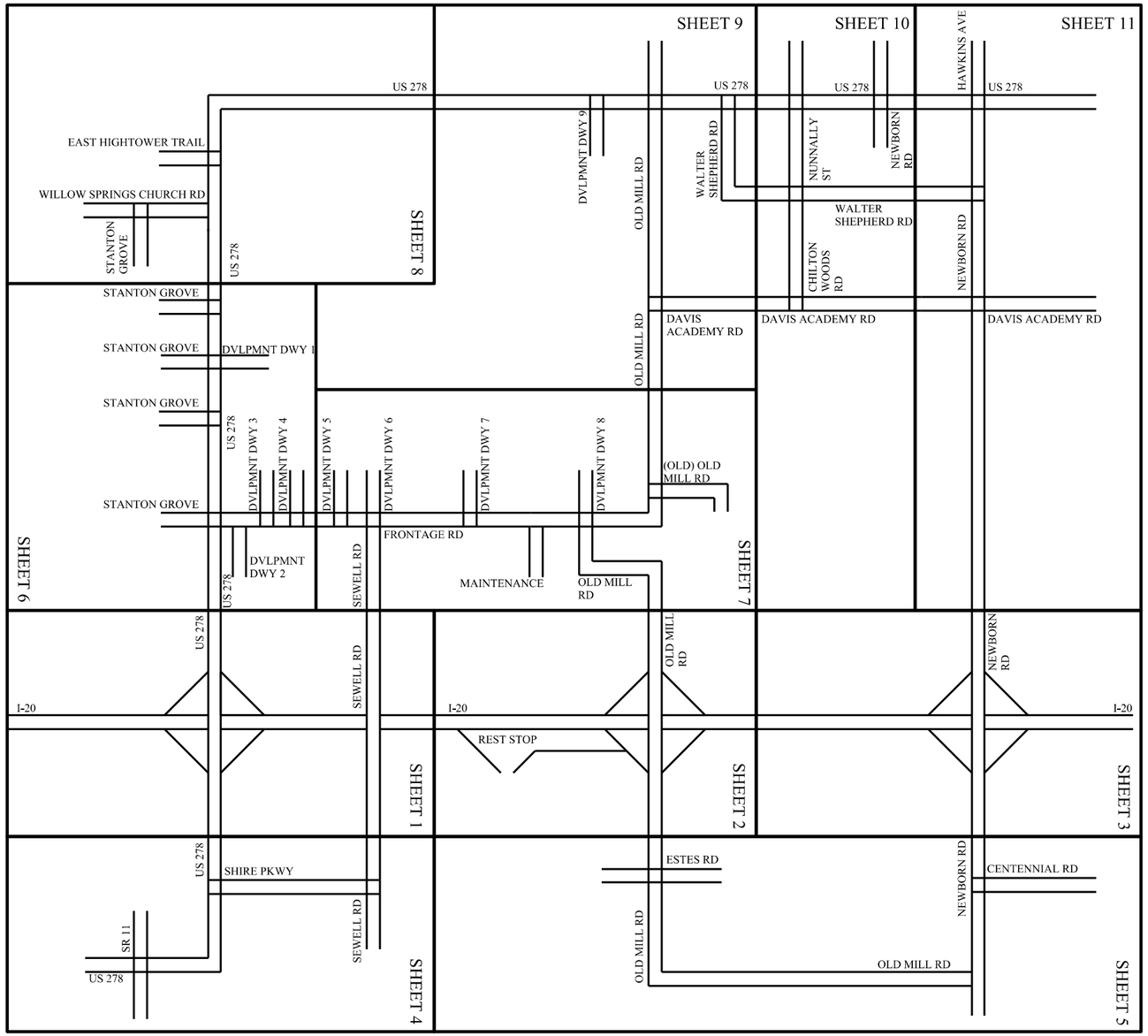

N

REVISION DATES		

STATE OF GEORGIA
DEPARTMENT OF TRANSPORTATION
OFFICE OF PLANNING
TRAFFIC DIAGRAM
PROJECT ADVENTURE

PROJECT 1 DESIGN YEAR BUILD LAYOUT
SHEET 1 OF 1

DRAWING No. 10-0090

ARCADIS Design & Consultancy for natural and built assets

COUNTY	STATE	PROJECT NUMBER	SHEET NO.	TOTAL SHEETS
MORGAN, NEWTON, WALTON	GA	PI 0017219 & PI 0018363	91	334

AADT VOLUMES
PRJ 1 DESIGN YEAR
2044 BUILD
AADT = XXX

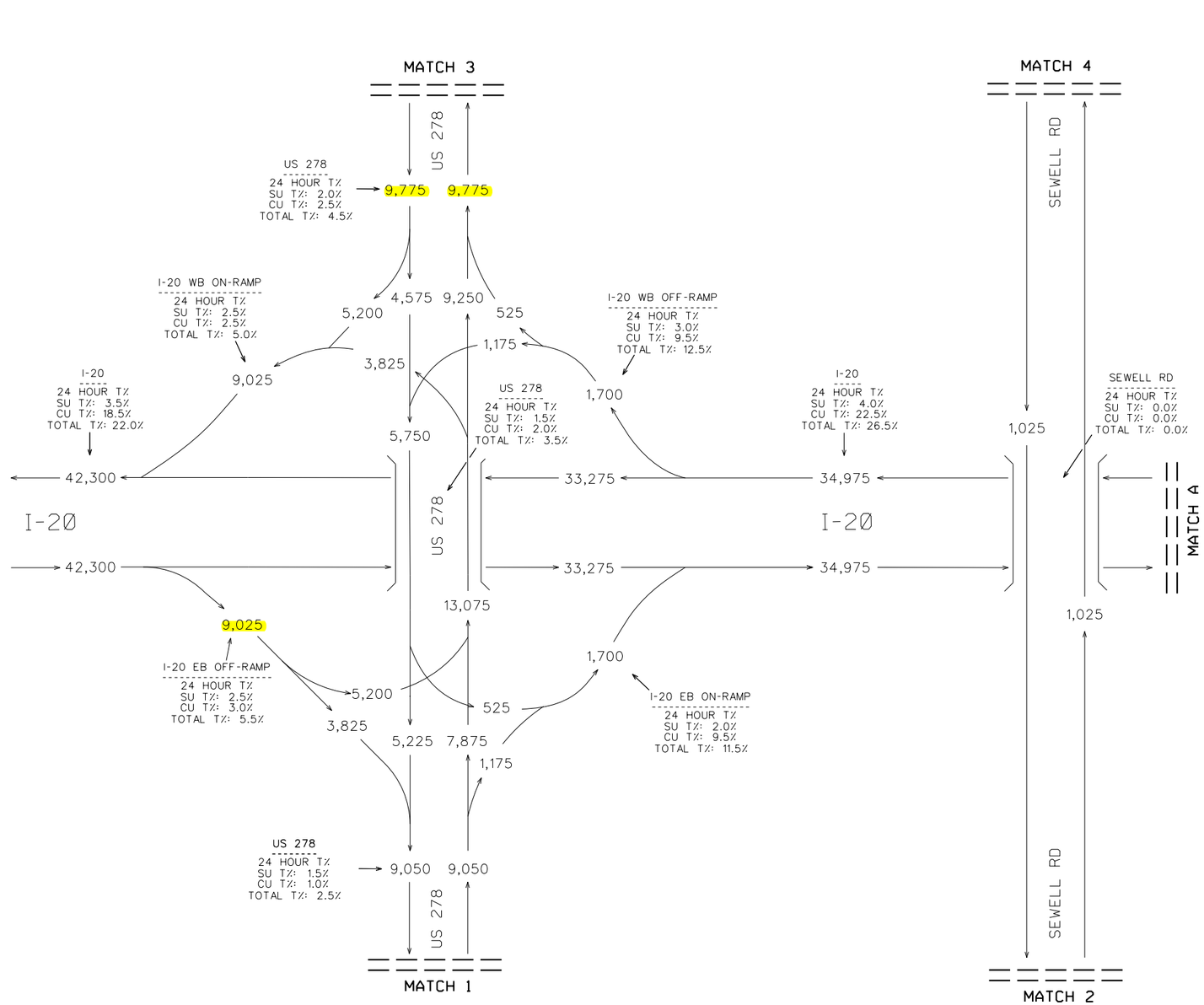

REVISION DATES		

STATE OF GEORGIA
DEPARTMENT OF TRANSPORTATION
OFFICE OF PLANNING
TRAFFIC DIAGRAM
PROJECT ADVENTURE

PRJ 1 DESIGN YEAR 2044 BUILD AADT
SHEET 1 OF 11

DRAWING No.
10-0091

COUNTY	STATE	PROJECT NUMBER	SHEET NO.	TOTAL SHEETS
MORGAN, NEWTON, WALTON	GA	PI 0017219 & PI 0018363	94	334

AADT VOLUMES
PRJ 1 DESIGN YEAR
2044 BUILD
AADT = XXX

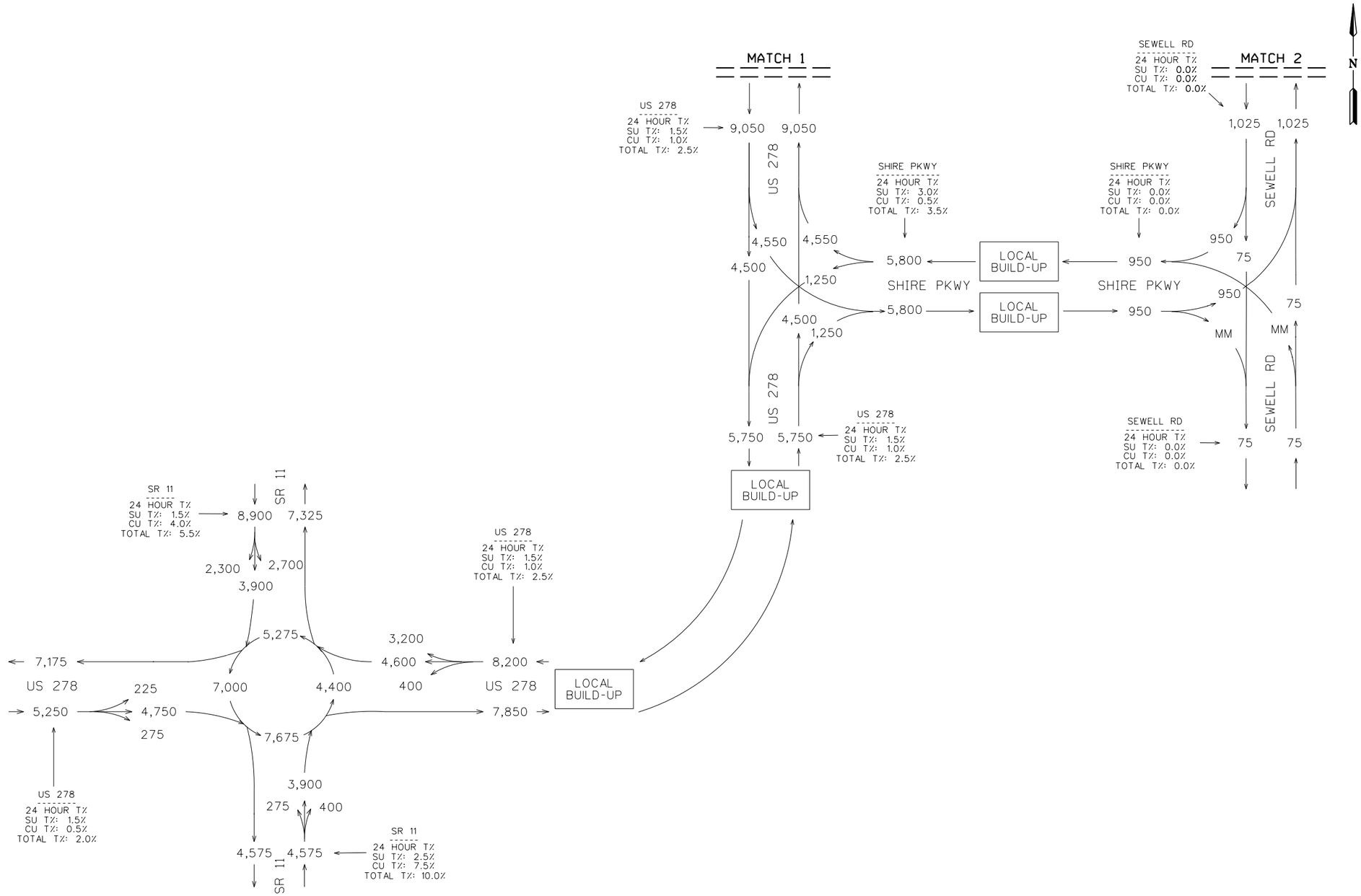

REVISION DATES		

STATE OF GEORGIA
DEPARTMENT OF TRANSPORTATION
OFFICE OF PLANNING
TRAFFIC DIAGRAM
PROJECT ADVENTURE

PRJ 1 DESIGN YEAR 2044 BUILD AADT
SHEET 4 OF 11

DRAWING No.
10-0094

COUNTY	STATE	PROJECT NUMBER	SHEET NO.	TOTAL SHEETS
MORGAN, NEWTON, WALTON	GA	PI 0017219 & PI 0018363	96	334

AADT VOLUMES
PRJ 1 DESIGN YEAR
2044 BUILD
AADT = XXX

N

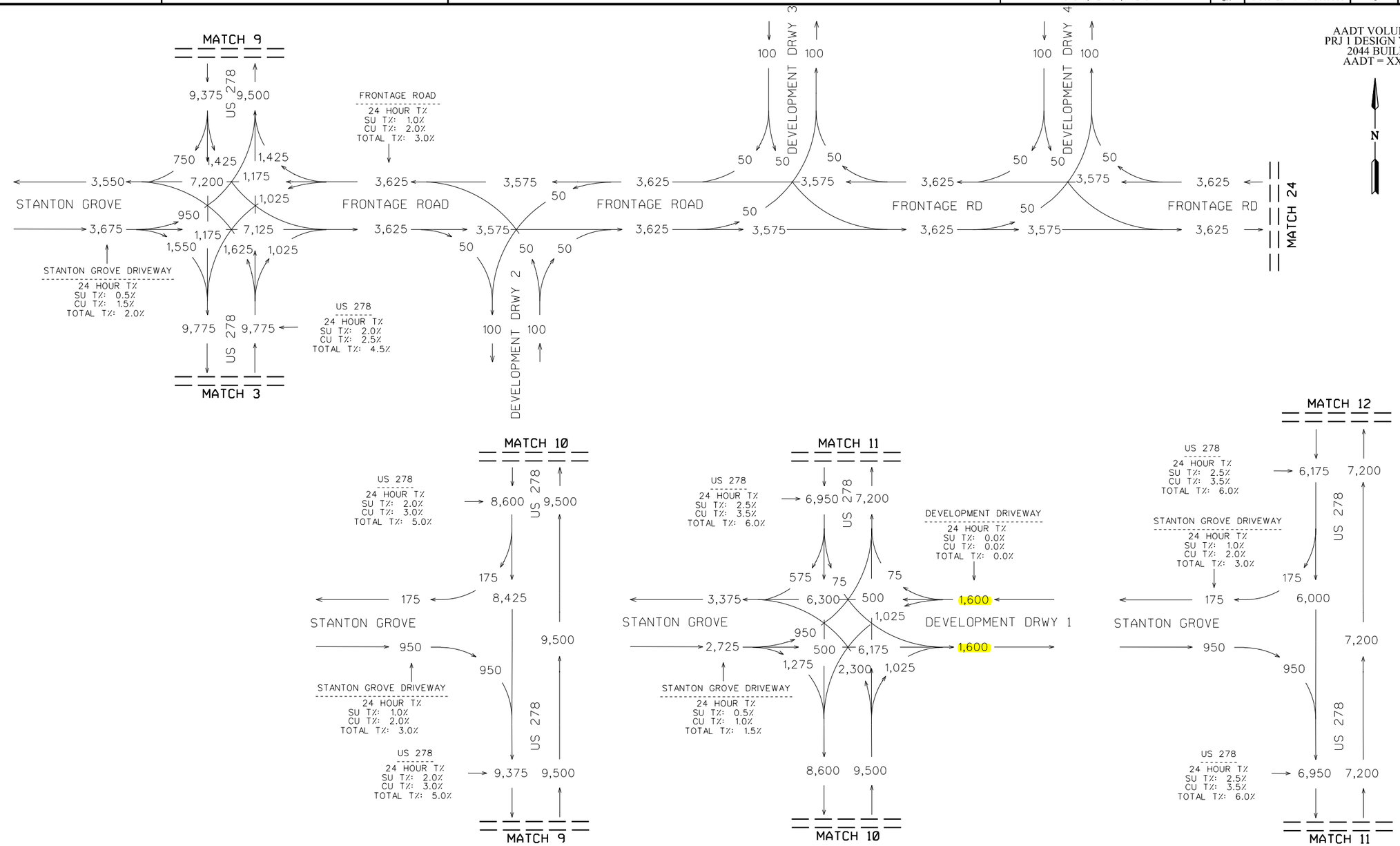

REVISION DATES		

STATE OF GEORGIA
DEPARTMENT OF TRANSPORTATION
OFFICE OF PLANNING
TRAFFIC DIAGRAM
PROJECT ADVENTURE

PRJ 1 DESIGN YEAR 2044 BUILD AADT
SHEET 6 OF 11

DRAWING No.
10-0096

COUNTY	STATE	PROJECT NUMBER	SHEET NO.	TOTAL SHEETS
MORGAN, NEWTON, WALTON	GA	PI 0017219 & PI 0018363	98	334

AADT VOLUMES
PRJ 1 DESIGN YEAR
2044 BUILD
AADT = XXX

N

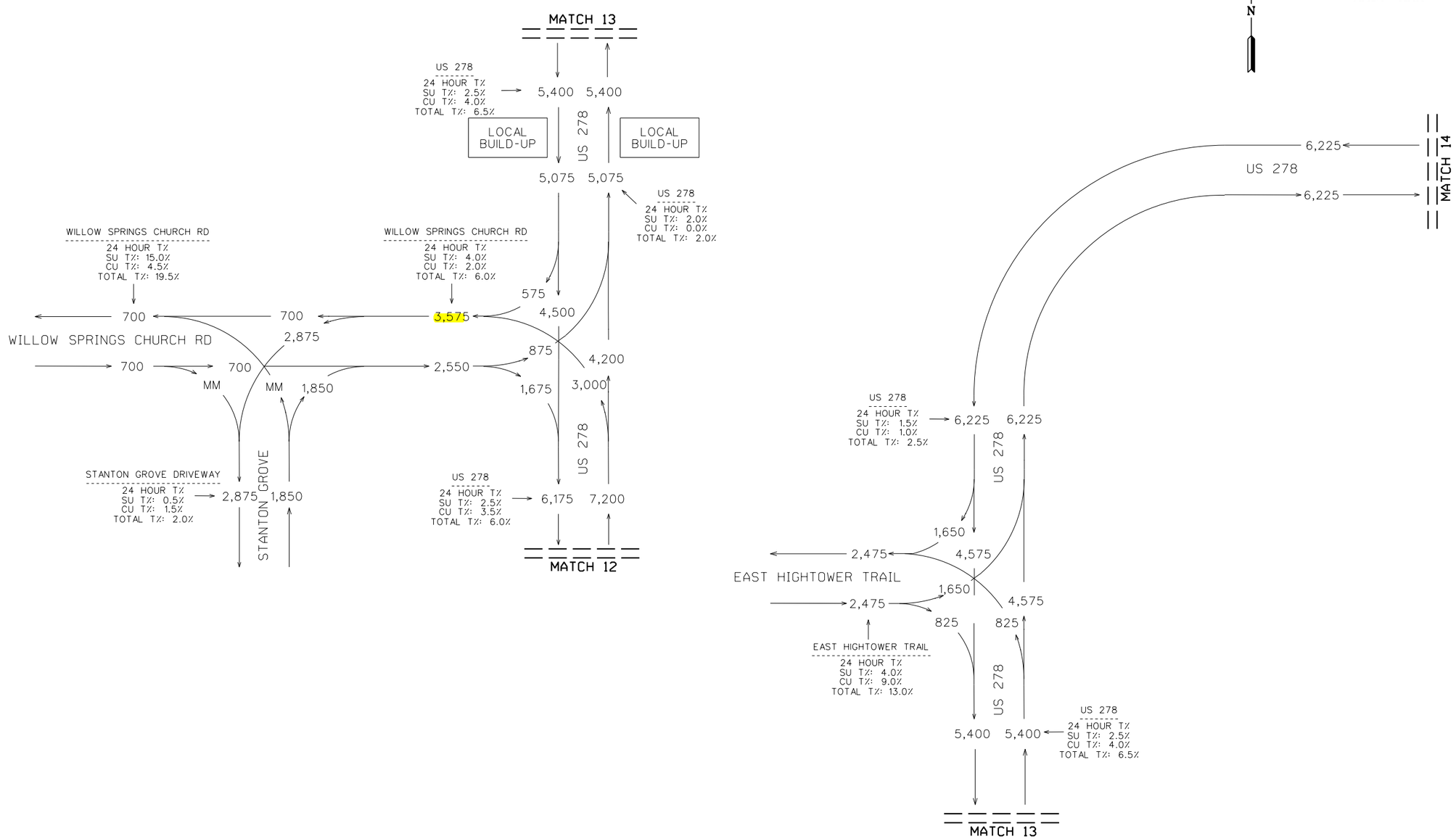

REVISION DATES		

STATE OF GEORGIA
DEPARTMENT OF TRANSPORTATION
OFFICE OF PLANNING
TRAFFIC DIAGRAM
PROJECT ADVENTURE

PRJ 1 DESIGN YEAR 2044 BUILD AADT
SHEET 8 OF 11

DRAWING No.
10-0098

COUNTY	STATE	PROJECT NUMBER	SHEET NO.	TOTAL SHEETS
MORGAN, NEWTON, WALTON	GA	PI 0017219 & PI 0018363	157	334

AADT VOLUMES
PRJ 1 OPEN YEAR +2
2026 BUILD
AADT = XXX

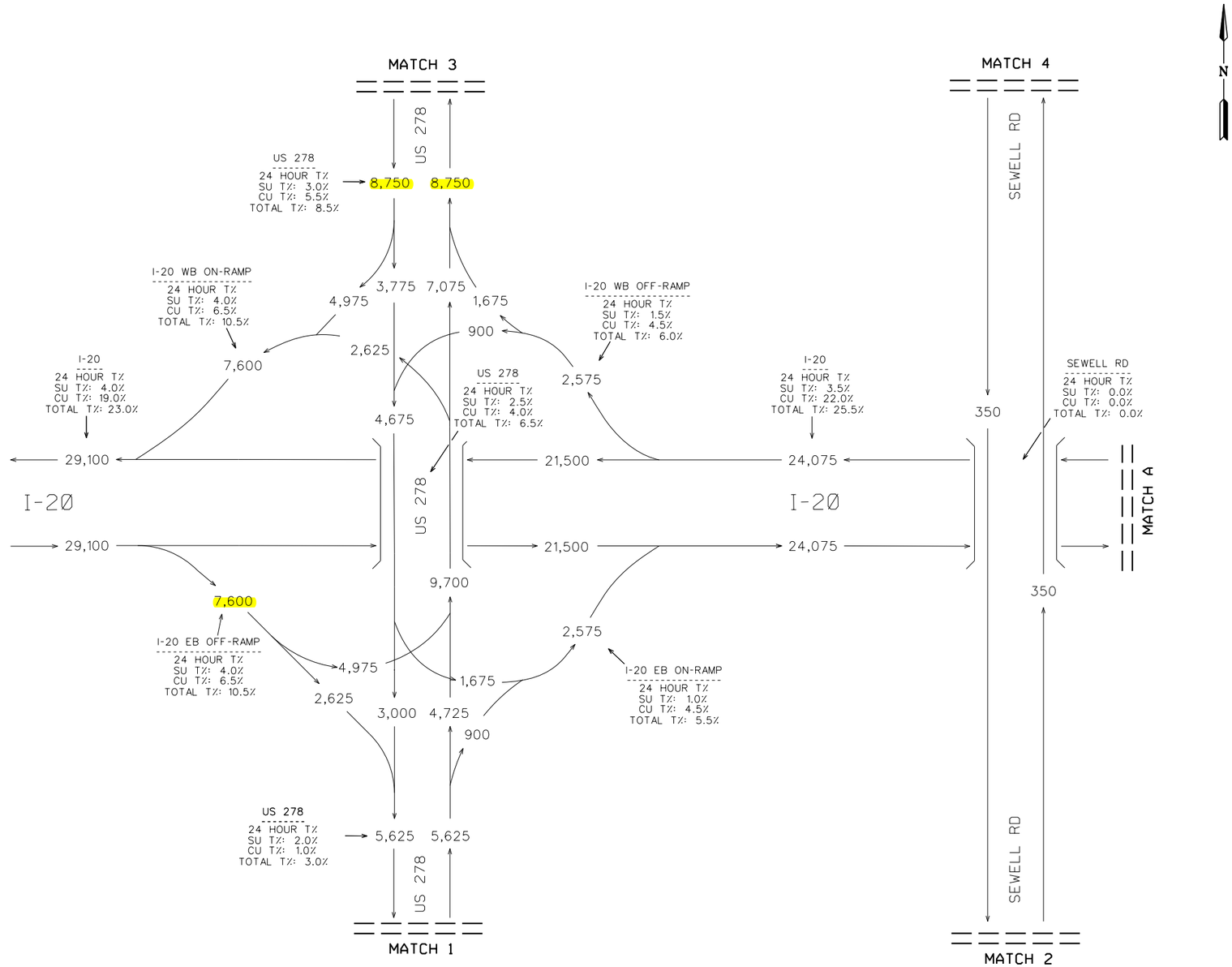

REVISION DATES		

STATE OF GEORGIA
DEPARTMENT OF TRANSPORTATION
OFFICE OF PLANNING
TRAFFIC DIAGRAM
PROJECT ADVENTURE

PRJ 1 OPEN YEAR +2 2026 BUILD AADT
SHEET 1 OF 11

DRAWING No.
10-0157

COUNTY	STATE	PROJECT NUMBER	SHEET NO.	TOTAL SHEETS
MORGAN, NEWTON, WALTON	GA	PI 0017219 & PI 0018363	160	334

AADT VOLUMES
PRJ 1 OPEN YEAR +2
2026 BUILD
AADT = XXX

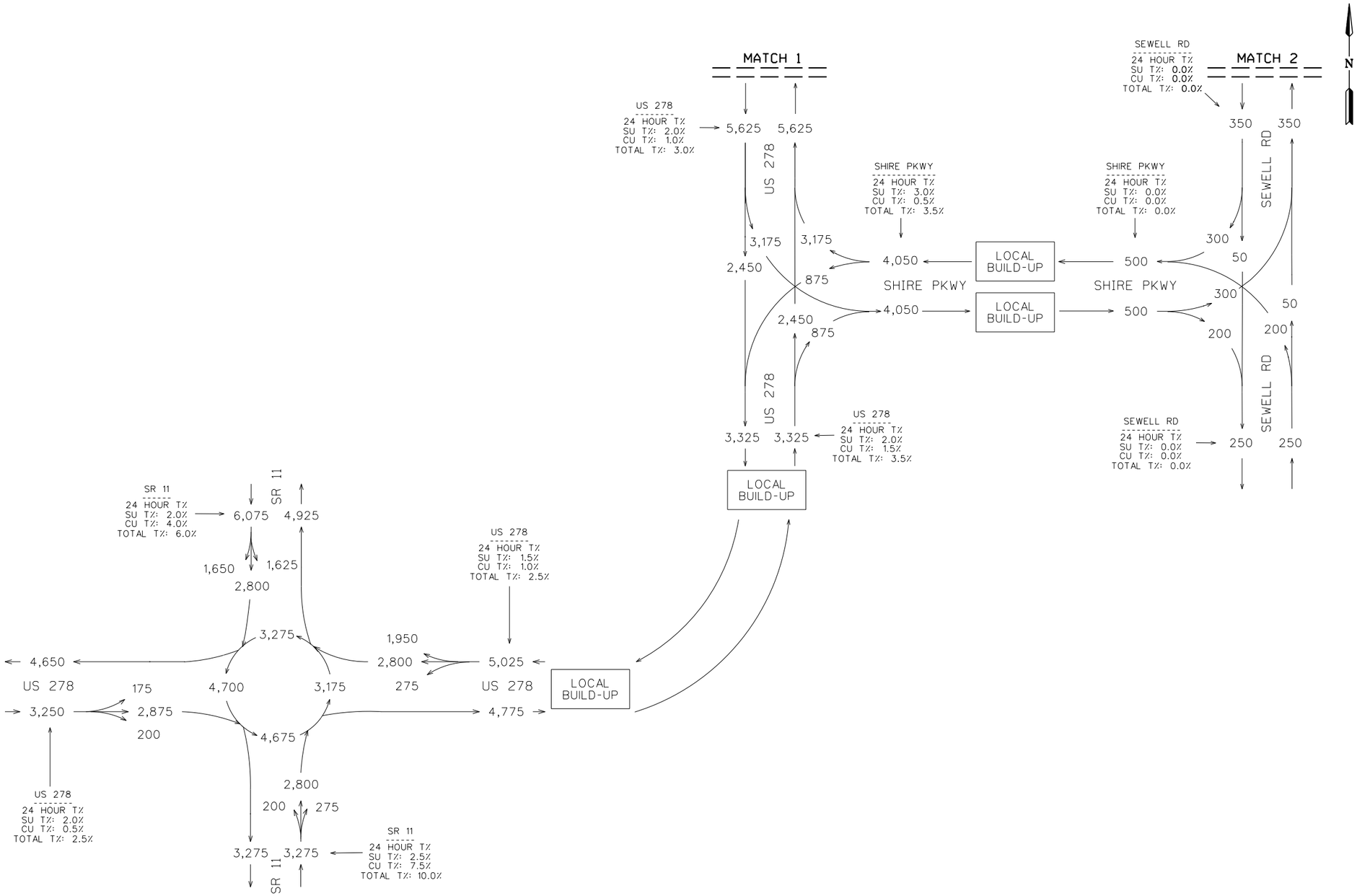

REVISION DATES		

STATE OF GEORGIA
DEPARTMENT OF TRANSPORTATION
OFFICE OF PLANNING
TRAFFIC DIAGRAM
PROJECT ADVENTURE

PRJ 1 OPEN YEAR +2 2026 BUILD AADT
SHEET 4 OF 11

DRAWING No.
10-0160

COUNTY	STATE	PROJECT NUMBER	SHEET NO.	TOTAL SHEETS
MORGAN, NEWTON, WALTON	GA	PI 0017219 & PI 0018363	162	334

AADT VOLUMES
PRJ 1 OPEN YEAR +2
2026 BUILD
AADT = XXX

N

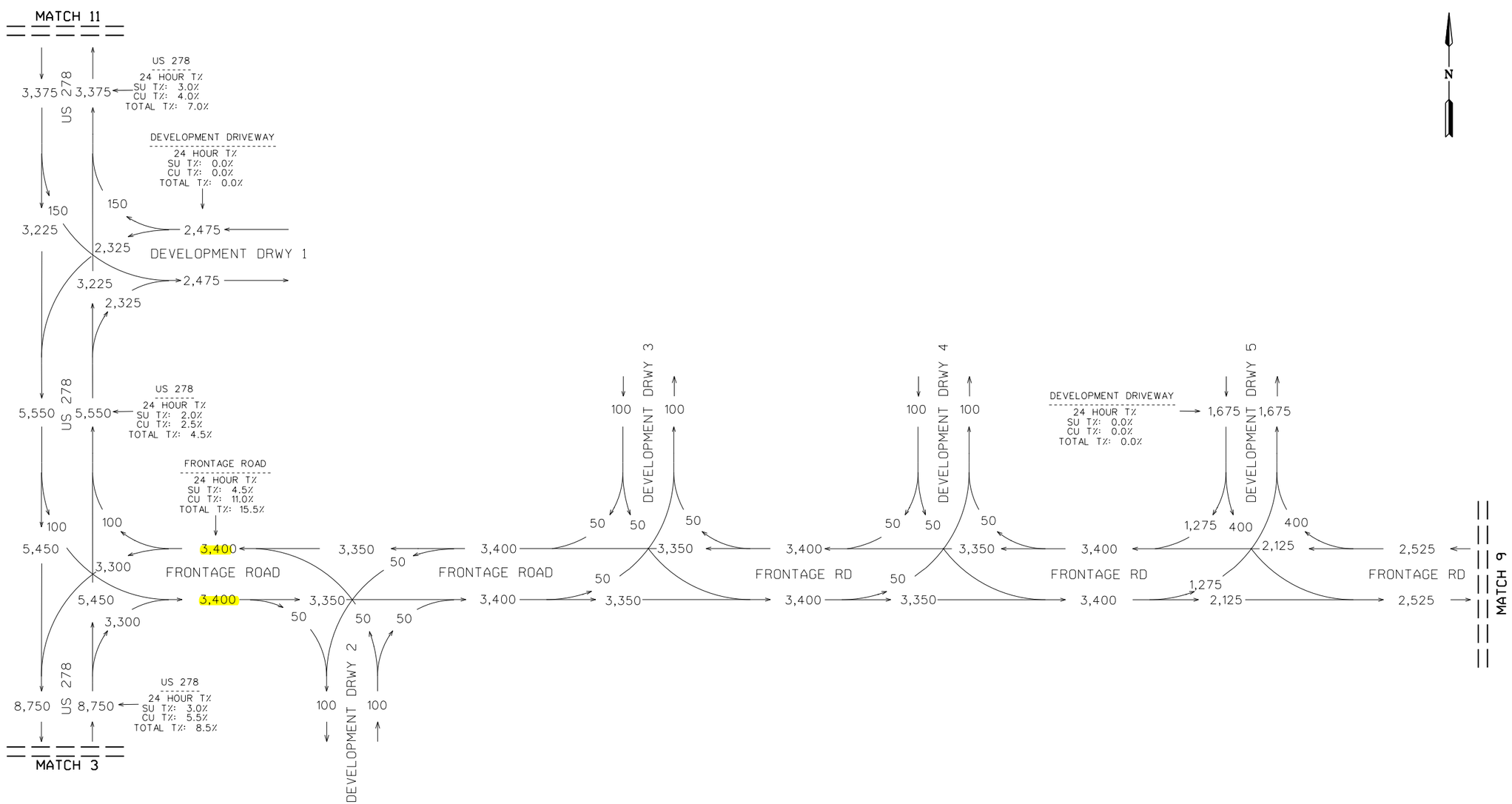

REVISION DATES		

STATE OF GEORGIA
DEPARTMENT OF TRANSPORTATION
OFFICE OF PLANNING
TRAFFIC DIAGRAM
PROJECT ADVENTURE

PRJ 1 OPEN YEAR +2 2026 BUILD AADT
SHEET 6 OF 11

DRAWING No.
10-0162

COUNTY	STATE	PROJECT NUMBER	SHEET NO.	TOTAL SHEETS
MORGAN, NEWTON, WALTON	GA	PI 0017219 & PI 0018363	164	334

AADT VOLUMES
PRJ 1 OPEN YEAR +2
2026 BUILD
AADT = XXX

N

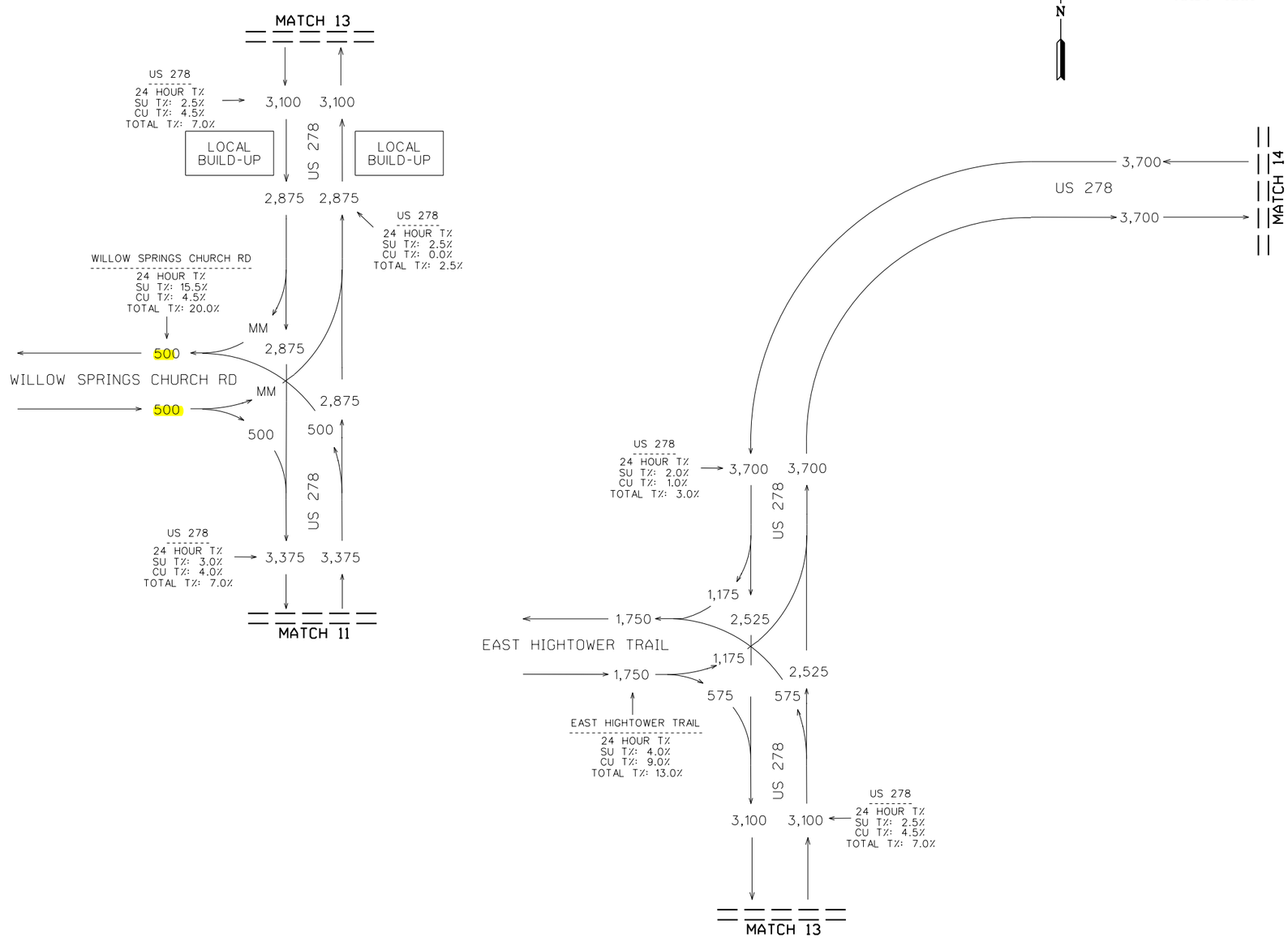

REVISION DATES		

STATE OF GEORGIA
DEPARTMENT OF TRANSPORTATION
OFFICE OF PLANNING
TRAFFIC DIAGRAM
PROJECT ADVENTURE

PRJ 1 OPEN YEAR +2 2026 BUILD AADT
SHEET 8 OF 11

DRAWING No.
10-0164

COUNTY	STATE	PROJECT NUMBER	SHEET NO.	TOTAL SHEETS
MORGAN, NEWTON, WALTON	GA	PI 0017219 & PI 0018363	179	334

AADT VOLUMES
PRJ 1 DESIGN YEAR +2
2046 BUILD
AADT = XXX

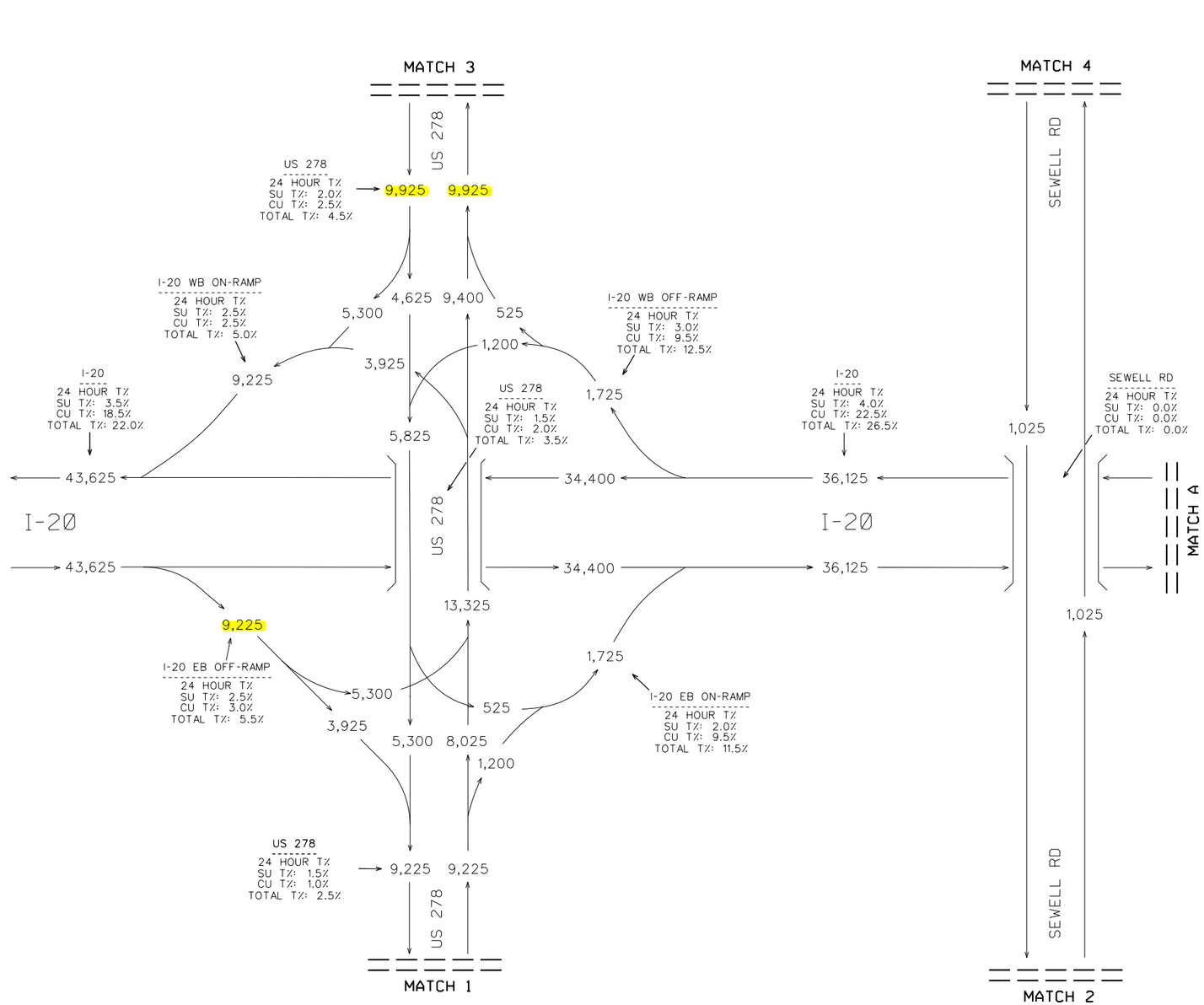

REVISION DATES		

STATE OF GEORGIA
DEPARTMENT OF TRANSPORTATION
OFFICE OF PLANNING
TRAFFIC DIAGRAM
PROJECT ADVENTURE

PRJ 1 DESIGN YEAR +2 2046 BUILD AADT
SHEET 1 OF 11

DRAWING No.
10-0179

COUNTY	STATE	PROJECT NUMBER	SHEET NO.	TOTAL SHEETS
MORGAN, NEWTON, WALTON	GA	PI 0017219 & PI 0018363	182	334

AADT VOLUMES
PRJ 1 DESIGN YEAR +2
2046 BUILD
AADT = XXX

N

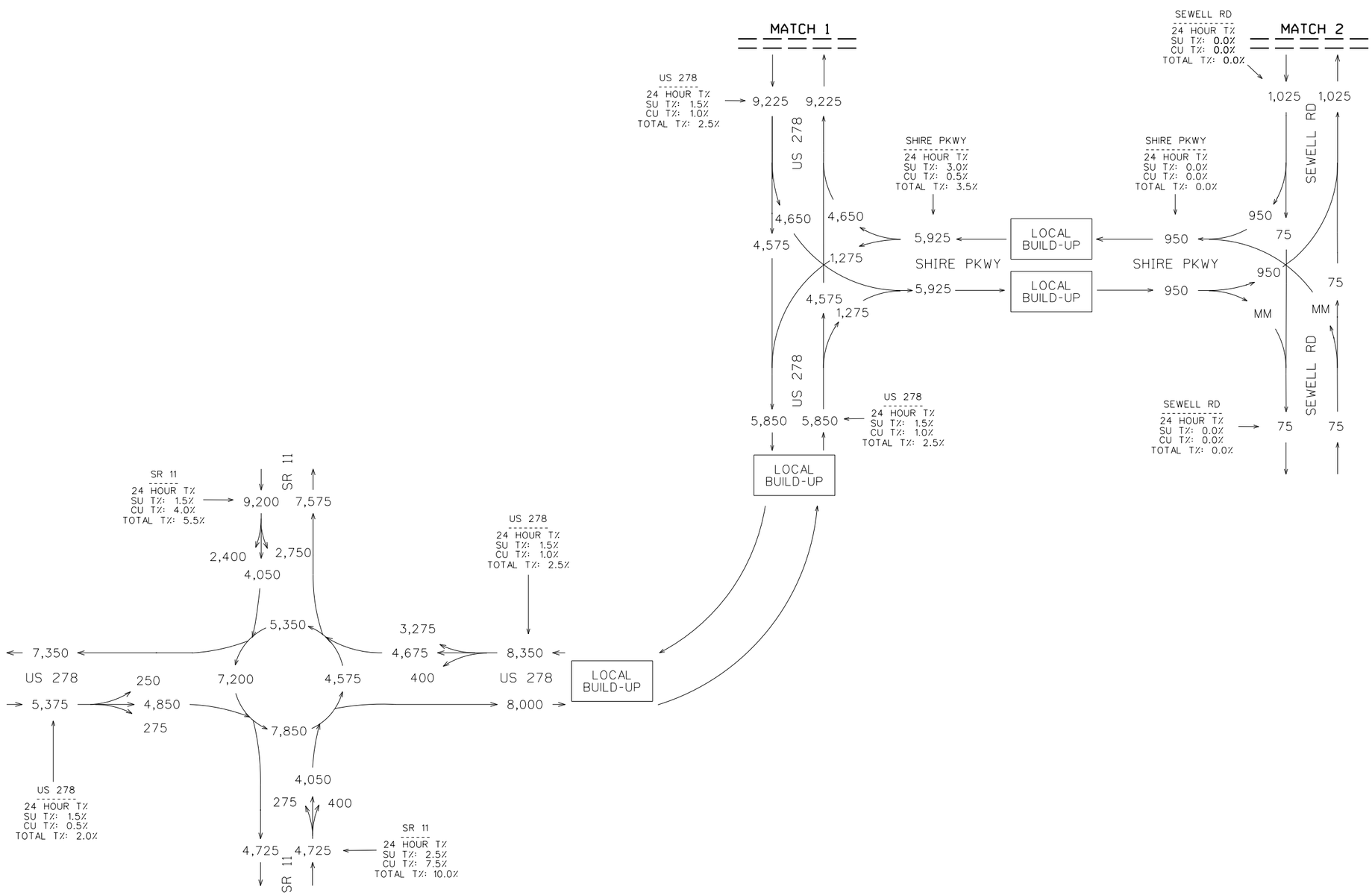

GDOT

ARCADIS Design & Consultancy for natural and built assets

REVISION DATES		

STATE OF GEORGIA
DEPARTMENT OF TRANSPORTATION
OFFICE OF PLANNING
TRAFFIC DIAGRAM
PROJECT ADVENTURE

PRJ 1 DESIGN YEAR +2 2046 BUILD AADT
SHEET 4 OF 11

DRAWING No.
10-0182

COUNTY	STATE	PROJECT NUMBER	SHEET NO.	TOTAL SHEETS
MORGAN, NEWTON, WALTON	GA	PI 0017219 & PI 0018363	184	334

AADT VOLUMES
PRJ 1 DESIGN YEAR +2
2046 BUILD
AADT = XXX

N

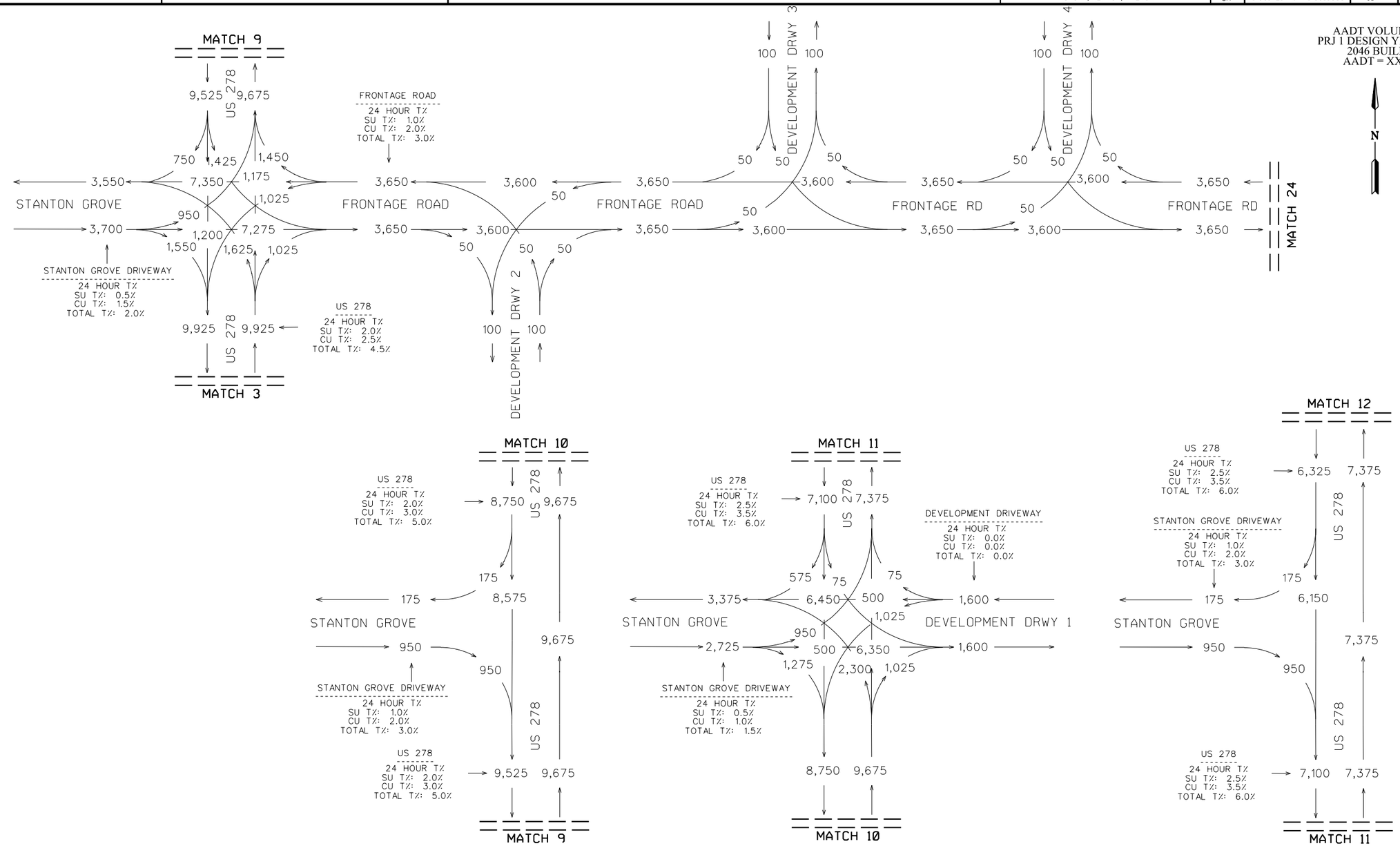

REVISION DATES		

STATE OF GEORGIA
DEPARTMENT OF TRANSPORTATION
OFFICE OF PLANNING
TRAFFIC DIAGRAM
PROJECT ADVENTURE

PRJ 1 DESIGN YEAR +2 2046 BUILD AADT
SHEET 6 OF 11

DRAWING No.
10-0184

COUNTY	STATE	PROJECT NUMBER	SHEET NO.	TOTAL SHEETS
MORGAN, NEWTON, WALTON	GA	PI 0017219 & PI 0018363	186	334

AADT VOLUMES
PRJ 1 DESIGN YEAR +2
2046 BUILD
AADT = XXX

N

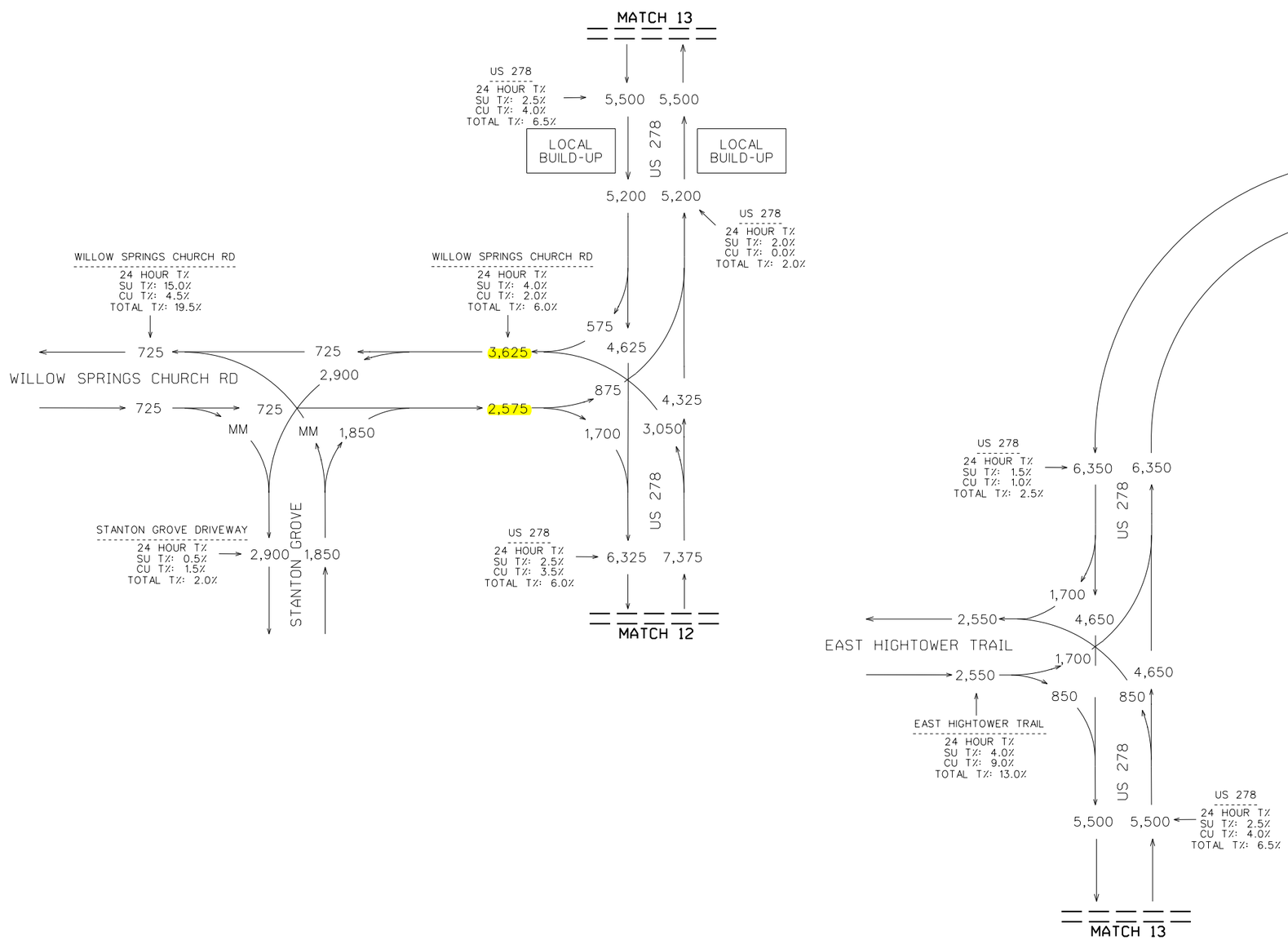

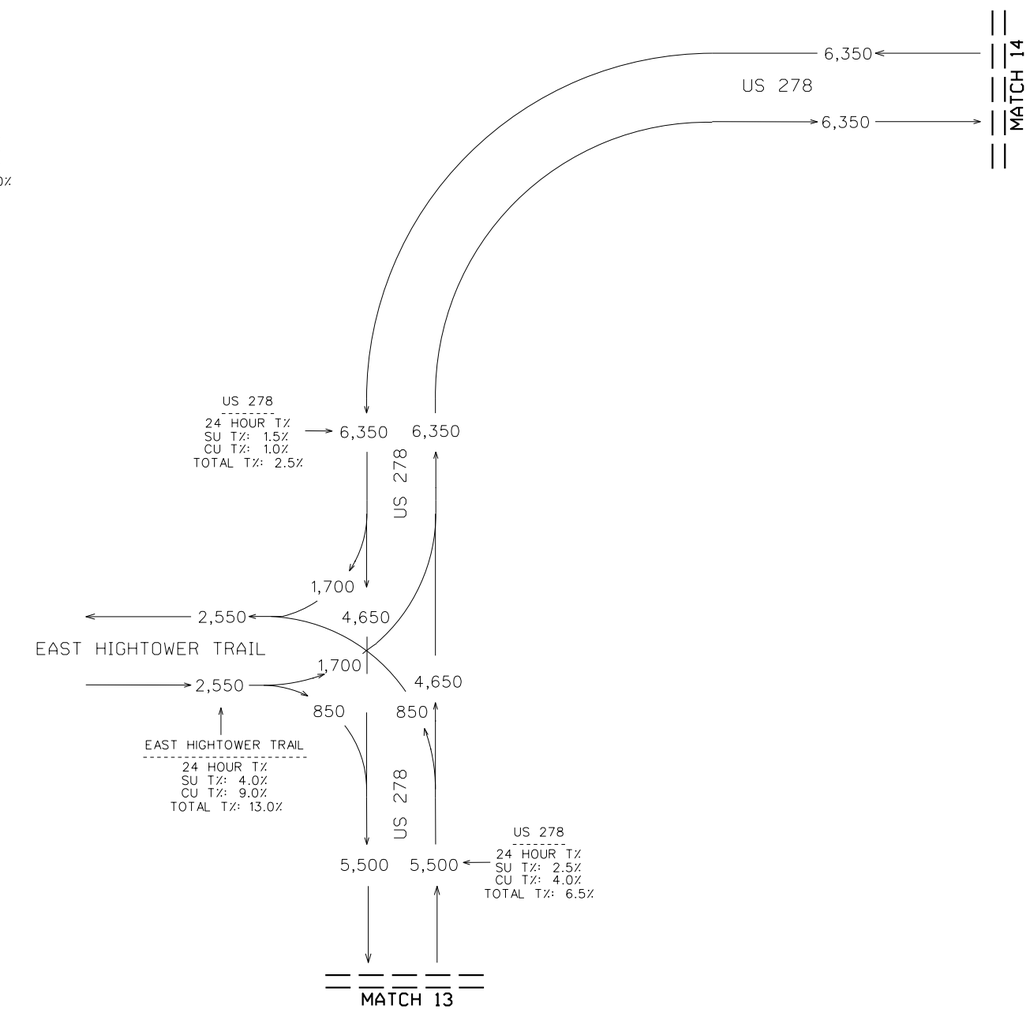

REVISION DATES		

STATE OF GEORGIA
DEPARTMENT OF TRANSPORTATION
OFFICE OF PLANNING
TRAFFIC DIAGRAM
PROJECT ADVENTURE

PRJ 1 DESIGN YEAR +2 2046 BUILD AADT
SHEET 8 OF 11

DRAWING No.
10-0186

Attachment 3 – Plan layout & Typical Cross sections

DEPARTMENT OF TRANSPORTATION
STATE OF GEORGIA

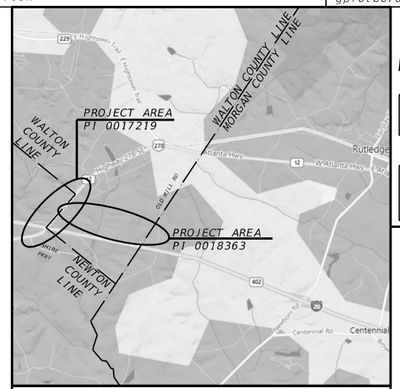

LOCATION SKETCH

PLAN AND PROFILE OF PROPOSED
US 278/SR 12 FROM WILLOW SPRINGS CHURCH RD TO SHIRE PKWY (0017219)
I-20 FRONTAGE ROAD FROM US 278/SR 12 TO CR 249/OLD MILL ROAD (0018363)

NEWTON COUNTY
WALTON COUNTY
MORGAN COUNTY

COSTING PLANS
NOT FOR CONSTRUCTION

FEDERAL ROUTE No.: US 278
STATE ROUTE No.: SR 12
P.I. No.: 0017219
P.I. No.: 0018363

DESIGN DATA:	US278	FRONTAGE RD	OLD MILL RD
TRAFFIC A.D.T. (2024):	17,350	6,750	4,800
TRAFFIC A.D.T. (2044):	19,550	13,300	4,000
TRAFFIC D.H.V. (2044):	2,130	1,645	575
DIRECTIONAL DIST:	62.0%	74.0%	66.0%
% TRUCKS (2044):	4.0%	4.5%	0.5%
24 HR.TRUCKS % (2044):	4.5%	3.0%	0.5%
SPEED DESIGN:	45 MPH	45 MPH	55 MPH

NOTE :
ALL REFERENCES IN THIS DOCUMENT, WHICH INCLUDES ALL PAPERS, WRITINGS, DOCUMENTS, DRAWINGS, OR PHOTOGRAPHS USED, OR TO BE USED IN CONNECTION WITH THIS DOCUMENT, TO " STATE HIGHWAY DEPARTMENT OF GEORGIA ", " STATE HIGHWAY DEPARTMENT ", " GEORGIA STATE HIGHWAY DEPARTMENT ", " HIGHWAY DEPARTMENT ", OR " DEPARTMENT " WHEN THE CONTEXT THEREOF MEANS THE STATE HIGHWAY DEPARTMENT OF GEORGIA, AND SHALL BE DEEMED TO MEAN THE DEPARTMENT OF TRANSPORTATION.

NOTE :
THESE PLANS HAVE BEEN PREPARED IN ACCORDANCE WITH THE 2022 CONSTRUCTION STANDARDS AND DETAILS BOOK AND ATTACHED APPLICABLE REVISIONS. THE 2022 CONSTRUCTION STANDARDS AND DETAILS BOOK IS AVAILABLE AT:
HTTP://MYDOCS.DOT.GA.GOV/INFO/GDOTPUBS/CONSTRUCTIONSTANDARDSANDDETAILS/FORMS/ALLITEMS.ASPX
ANY REVISIONS CONTAINED WITHIN THIS PLAN SET SUPERSEDE THE 2022 CONSTRUCTION STANDARDS AND DETAILS BOOK WHICH THEY REVISE OR IN WHICH THERE IS A CONFLICT

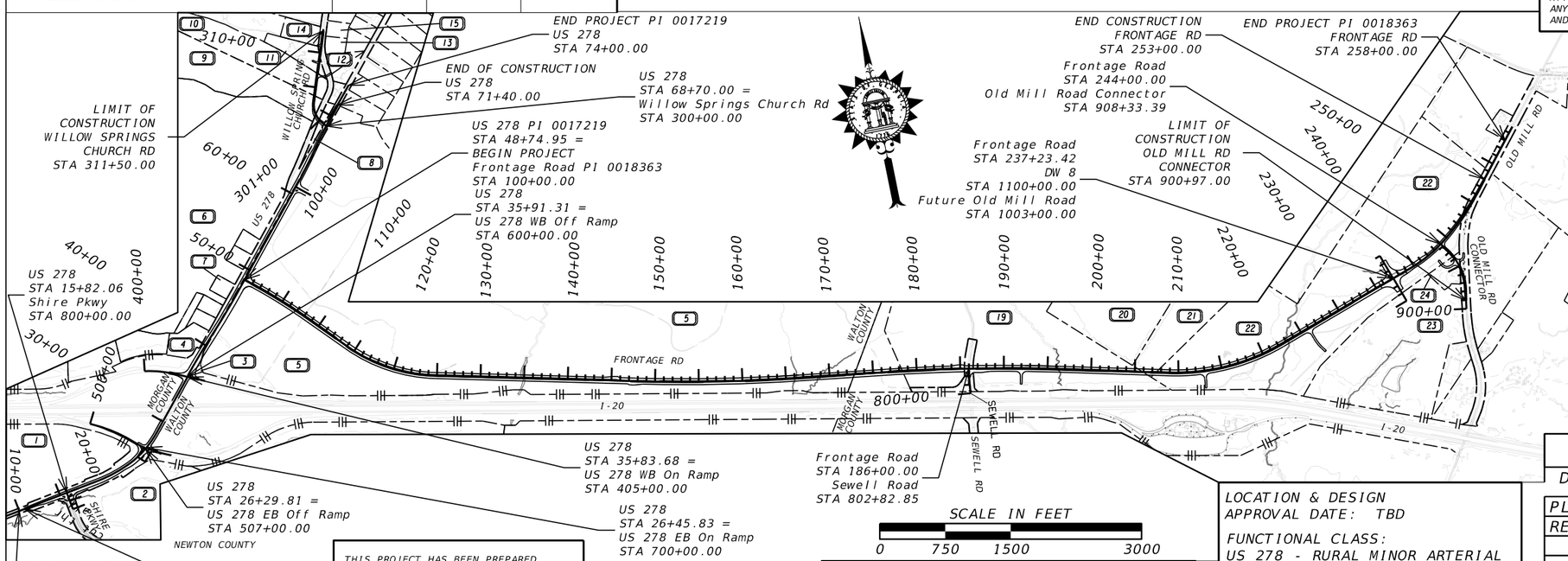

SCALE IN FEET
0 750 1500 3000

BEGIN PROJECT
PI 0017219
US 278
STA 10+00
N = 1312485.4004
E = 2436905.2740

BEGIN
CONSTRUCTION
US 278
STA 10+69.73

THIS PROJECT HAS BEEN PREPARED USING THE HORIZONTAL GEORGIA COORDINATE SYSTEM OF 1984 (NAD 1983)/94 WEST ZONE, AND THE NORTH AMERICAN VERTICAL DATUM (NAVD) OF 1988.

THE DATA, TOGETHER WITH ALL OTHER INFORMATION SHOWN ON THESE PLANS OR IN ANYWAY INDICATED THEREBY, WHETHER BY DRAWINGS OR NOTES, OR IN ANY OTHER MANNER, ARE BASED UPON FIELD INVESTIGATIONS AND ARE BELIEVED TO BE INDICATIVE OF ACTUAL CONDITIONS. HOWEVER, THE SAME ARE SHOWN AS INFORMATION ONLY, ARE NOT GUARANTEED, AND DO NOT BIND THE DEPARTMENT OF TRANSPORTATION IN ANY WAY. THE ATTENTION OF BIDDER IS SPECIFICALLY DIRECTED TO SUBSECTIONS 102.04, 102.05, AND 104.03 OF THE SPECIFICATIONS.

LENGTH OF PROJECT	COUNTY No. NEWTON - 217 WALTON - 297 MORGAN - 211 Project No. 0017219 & 0018363	
	MILES	
	0017219	0018363
NET LENGTH OF ROADWAY	1.1685	2.9924
NET LENGTH OF BRIDGES	0.0436	0.0000
NET LENGTH OF PROJECT	1.2121	2.9924
NET LENGTH OF EXCEPTIONS	0.0000	0.0000
GROSS LENGTH OF PROJECT	1.2121	2.9924

LOCATION & DESIGN
APPROVAL DATE: TBD

FUNCTIONAL CLASS:
US 278 - RURAL MINOR ARTERIAL
FRONTAGE RD - RURAL MINOR ARTERIAL
OLD MILL RD - RURAL LOCAL

THIS PROJECT IS 2% IN NEWTON COUNTY, 50% IN WALTON COUTNY, AND 48% IN MORGAN COUNTY. AND IS 100% IN CONG. DIST. NO. 010.

PROJECT DESIGNATION:
EXEMPT

ARCADIS Design & Consultancy for natural and built assets

Michael Baker INTERNATIONAL

PLANS PREPARED BY: _____
DESIGN

RECOMMENDED FOR APPROVAL BY: _____
STATE DESIGN ENGINEER

DATE CHIEF ENGINEER

PLANS COMPLETED - -	
REVISIONS	

DRAWING No.
01-0001

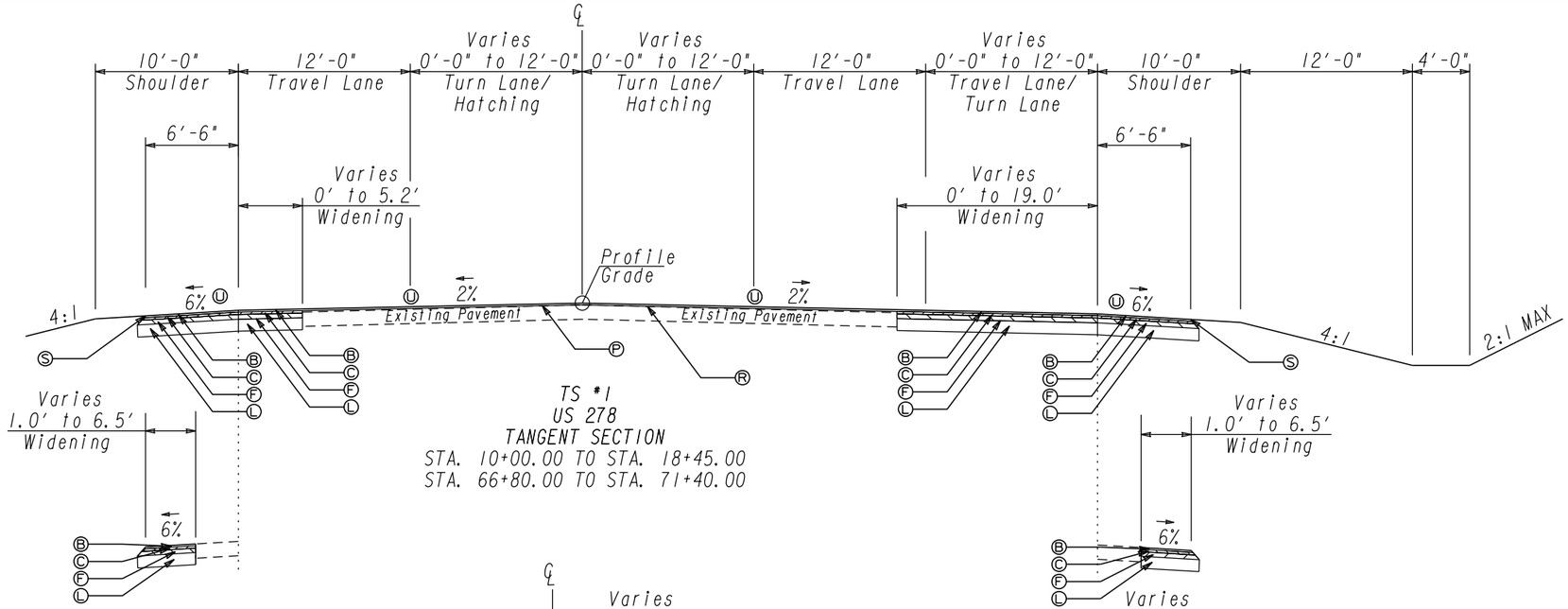

TS #1
US 278
TANGENT SECTION
STA. 10+00.00 TO STA. 18+45.00
STA. 66+80.00 TO STA. 71+40.00

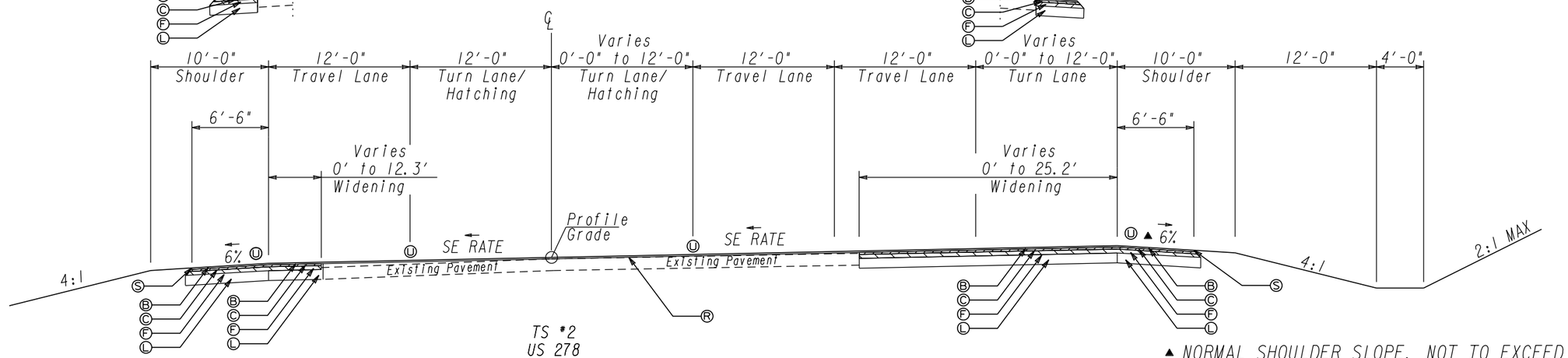

TS #2
US 278
SUPERELEVATION SECTION
STA. 18+45.00 to STA. 26+50.00

▲ NORMAL SHOULDER SLOPE, NOT TO EXCEED MAXIMUM SHOULDER BREAKOVER OF 8%.

PAVEMENT LEGEND

- Ⓐ RECYCLED ASPH CONC 9.5 MM SUPERPAVE, TYPE II, BLEND 1, INCL BITUM MATL & H LIME (137.5 LB/SQ YD)
- Ⓑ RECYCLED ASPH CONC 12.5 MM SUPERPAVE, GP 2 ONLY, INCL BITUM MATL & H LIME (165 LB/SQ YD)
- Ⓒ RECYCLED ASPH CONC 19 MM SUPERPAVE, GP 1 OR 2, INCL BITUM MATL & H LIME (220 LB/SQ YD)
- Ⓓ RECYCLED ASPH CONC 19 MM SUPERPAVE, GP 1 OR 2, INCL BITUM MATL & H LIME (330 LB/SQ YD)
- Ⓔ RECYCLED ASPH CONC 25 MM SUPERPAVE, GP 1 OR 2, INCL BITUM MATL & H LIME (330 LB/SQ YD)
- Ⓕ RECYCLED ASPH CONC 25 MM SUPERPAVE, GP 1 OR 2, INCL BITUM MATL & H LIME (550 LB/SQ YD)
- Ⓖ RECYCLED ASPH CONC 25 MM SUPERPAVE, GP 1 OR 2, INCL BITUM MATL & H LIME (660 LB/SQ YD)
- Ⓗ PLAIN PC CONC PVMT, CL 3 CONC, 10 INCH THK
- Ⓘ PLAIN PC CONC PVMT, CL 3 CONC, 12.5 INCH THK
- Ⓙ GR AGGR BASE CRS, 6 INCH, INCL MATL
- Ⓚ GR AGGR BASE CRS, 8 INCH, INCL MATL
- Ⓛ GR AGGR BASE CRS, 12 INCH, INCL MATL
- Ⓜ CONCRETE CURB & GUTTER, 8 IN X 30 IN, TP 2
- Ⓝ CONCRETE CURB & GUTTER, 8 IN X 30 IN, TP 7
- Ⓞ CONCRETE SIDEWALK, 4 IN. (SEE GDOT CONST DETAIL A1 TO A4)
- Ⓟ MILL ASPH CONC PVMT, VARIABLE DEPTH AS REQUIRED
- Ⓠ RECYCLED ASPH CONC PATCHING, INCL BITUM MATL & H LIME (AS DIRECTED BY ENGINEER)
- Ⓡ RECYCLED ASPH CONC LEVELING, INCL BITUM MATL & H LIME
- Ⓢ ASPHALT PAVEMENT EDGE TREATMENT (SEE GDOT CONST DETAIL P-7)
- Ⓣ PAVEMENT REINFORCEMENT FABRIC, 18" WIDE. (SEE DETAIL ON DRAWING 5-0006)
- Ⓤ RUMBLE STRIPS (SEE GDOT CONST DETAIL T-23A, T-23B, T-24 & T-25))
- Ⓥ SOD (END SOD AT SHOULDER BREAK POINT)
- Ⓦ CONCRETE MEDIAN, 6 INCH

GDOT Georgia Department of Transportation

ARCADIS Design & Consultancy for natural and built assets
Michael Baker INTERNATIONAL

NTS

REVISION DATES

TYPICAL SECTIONS
US 278 / SR 12

CHECKED:		DATE:	
BACKCHECKED:		DATE:	
CORRECTED:		DATE:	
VERIFIED:		DATE:	

DRAWING No. 05-0001

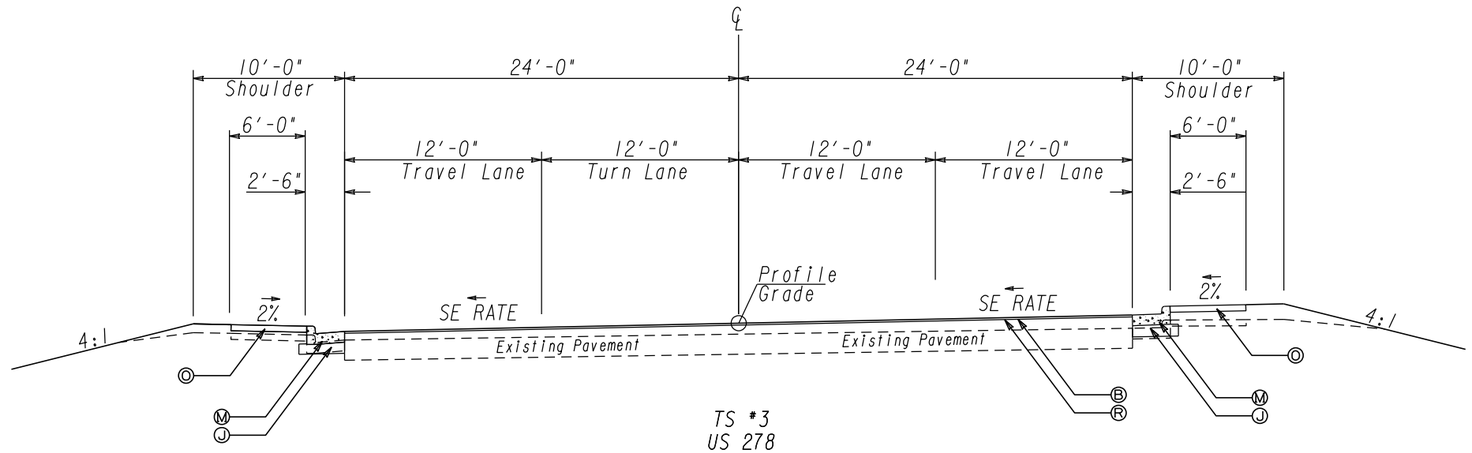

TS #3
US 278
SUPERELEVATION SECTION
STA. 26+50.00 TO STA. 29+00.00

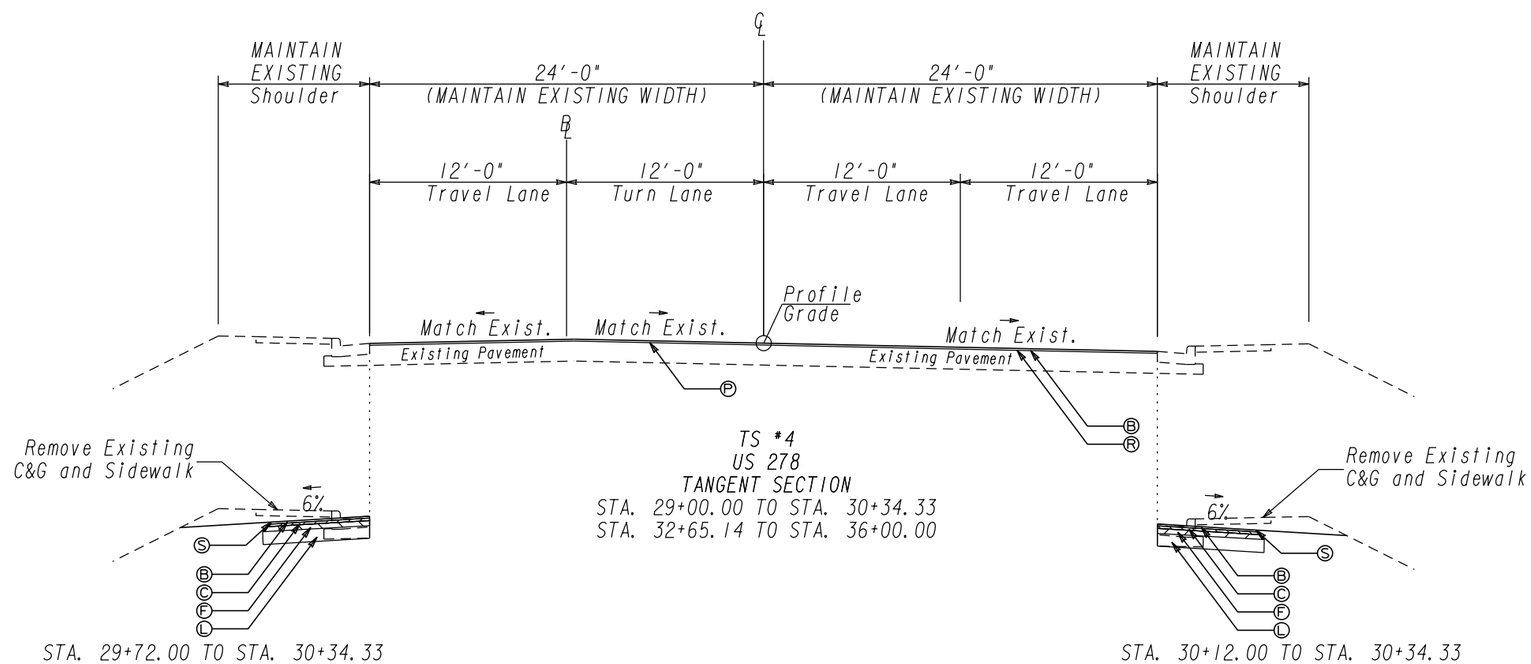

TS #4
US 278
TANGENT SECTION
STA. 29+00.00 TO STA. 30+34.33
STA. 32+65.14 TO STA. 36+00.00

STA. 29+72.00 TO STA. 30+34.33
STA. 32+65.14 TO STA. 32+88.00

STA. 30+12.00 TO STA. 30+34.33
STA. 32+65.14 TO STA. 33+39.00

GDOT Georgia Department of Transportation

ARCADIS Design & Consultancy for natural and built assets
Michael Baker INTERNATIONAL

NTS

REVISION DATES

TYPICAL SECTIONS
US 278 / SR 12

CHECKED:		DATE:	
BACKCHECKED:		DATE:	
CORRECTED:		DATE:	
VERIFIED:		DATE:	

DRAWING No.
05-0002

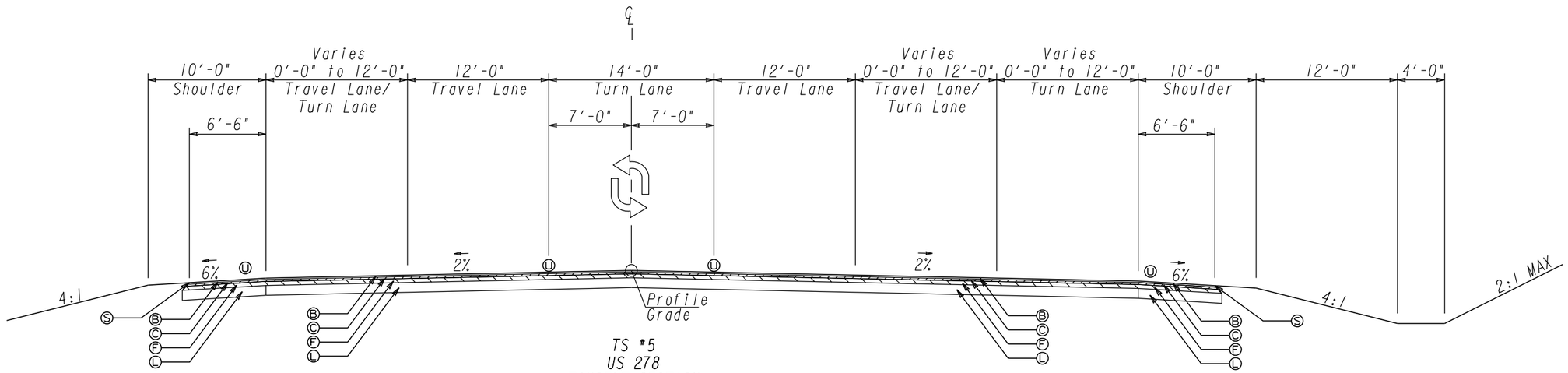

TS #5
US 278
TANGENT SECTION
STA. 36+00.00 TO STA. 66+80.00

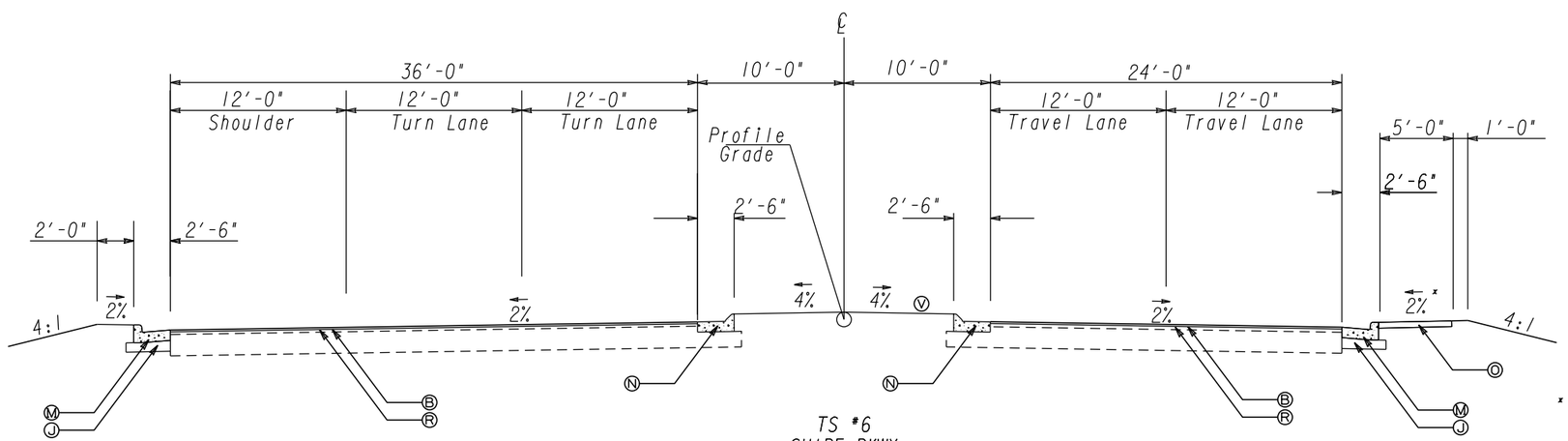

TS #6
SHIRE PKWY
TANGENT SECTION
STA. 800+35.39 TO STA. 800+90.00

x-MAINTAIN EXISTING SIDEWLAK FROM STA 800+65.35 TO STA 800+90.00

GDOT Georgia Department of Transportation

ARCADIS Design & Consultancy for natural and built assets
Michael Baker INTERNATIONAL

NTS

REVISION DATES

TYPICAL SECTIONS
US 278 / SR 12

CHECKED: DATE:
BACKCHECKED: DATE:
CORRECTED: DATE:
VERIFIED: DATE:

DRAWING No.
05-0003

GPLN-CE

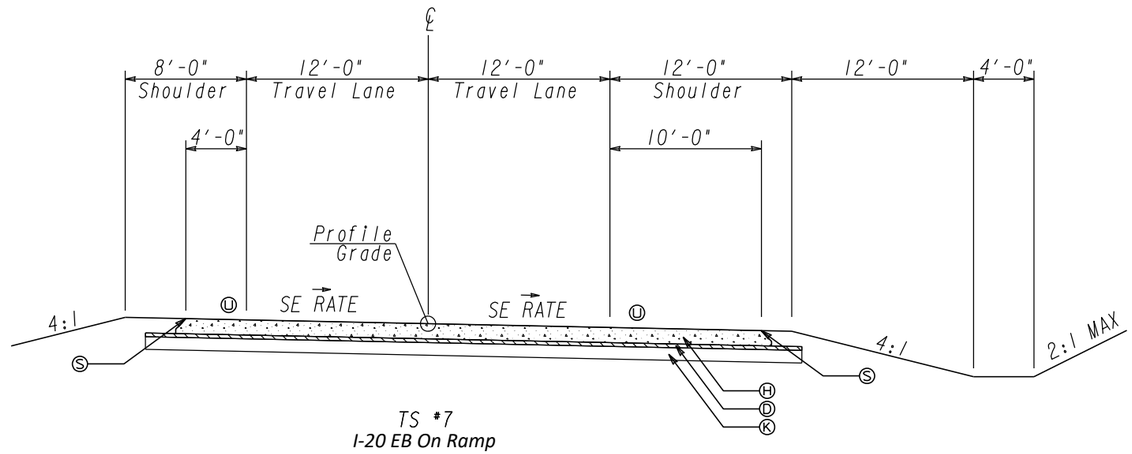

TS #7
I-20 EB On Ramp
SUPERELEVATION SECTION
STA. 700+24.90 TO STA. 701+35.00

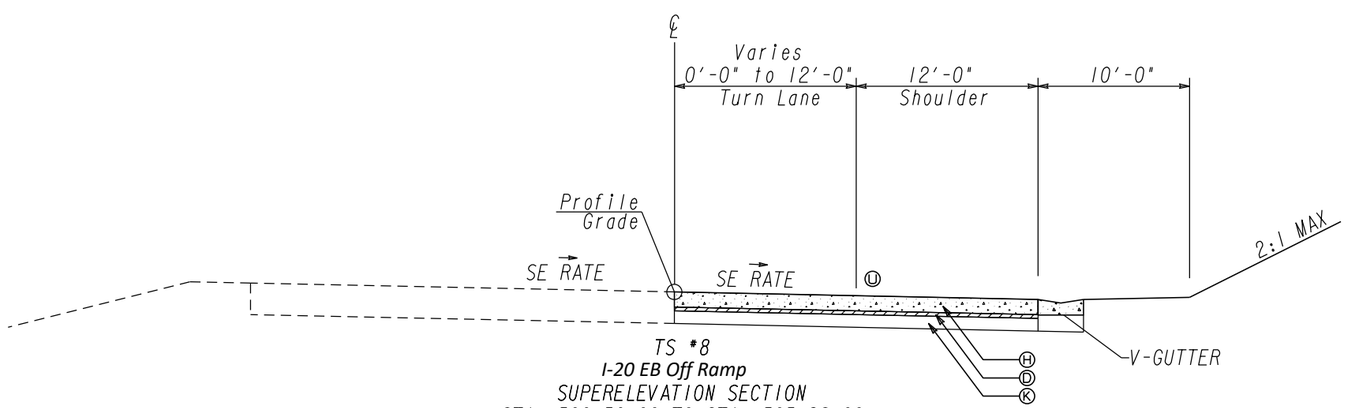

TS #8
I-20 EB Off Ramp
SUPERELEVATION SECTION
STA. 500+50.00 TO STA. 505+92.00

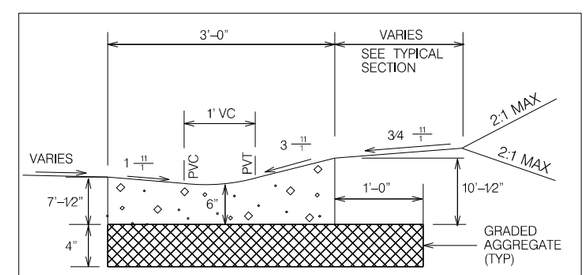

SPECIAL DESIGN
" V" GUTTER DETAILS

GDOT Georgia Department of Transportation

ARCADIS Design & Consultancy for natural and built assets
Michael Baker INTERNATIONAL

NTS

REVISION DATES

TYPICAL SECTIONS
US 278 / SR 12

CHECKED:		DATE:	
BACKCHECKED:		DATE:	
CORRECTED:		DATE:	
VERIFIED:		DATE:	

DRAWING No.
05-0004

GPLN-CE

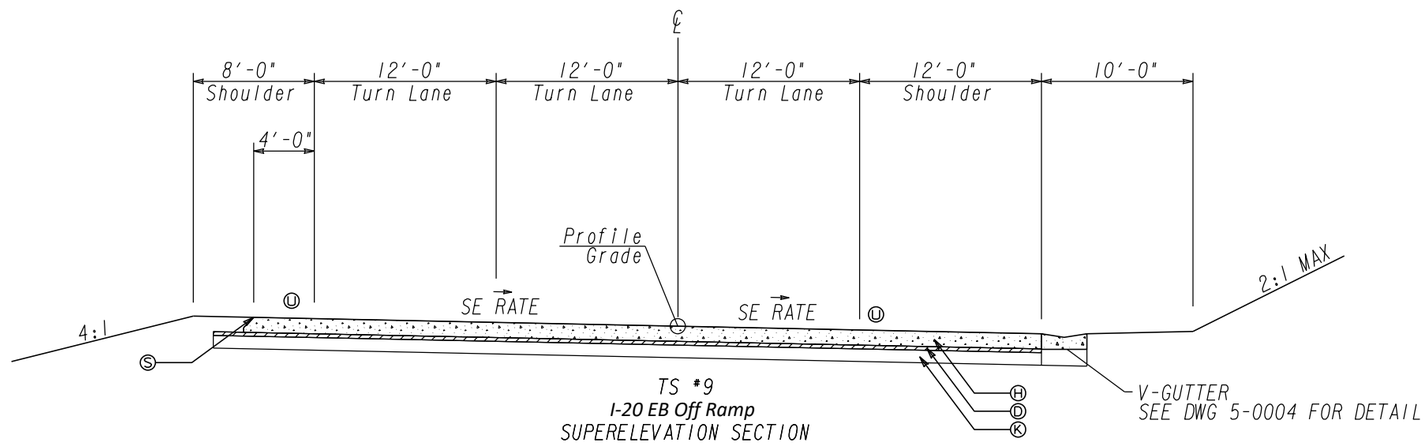

TS #9
I-20 EB Off Ramp
SUPERELEVATION SECTION
STA. 505+92.00 TO STA. 506+75.59

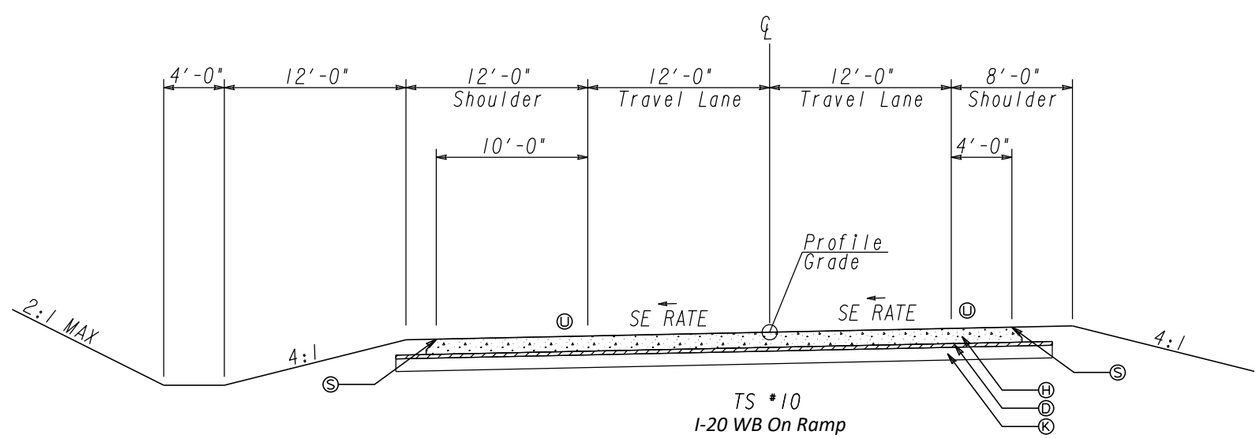

TS #10
I-20 WB On Ramp
SUPERELEVATION SECTION
STA. 402+80.00 TO STA. 404+73.09

GDOT Georgia Department of Transportation

ARCADIS Design & Consultancy for natural and built assets
Michael Baker INTERNATIONAL

NTS

REVISION DATES		

TYPICAL SECTIONS
US 278 / SR 12

CHECKED:		DATE:		DRAWING No.
BACKCHECKED:		DATE:		05-0005
CORRECTED:		DATE:		
VERIFIED:		DATE:		

GPLN-CE

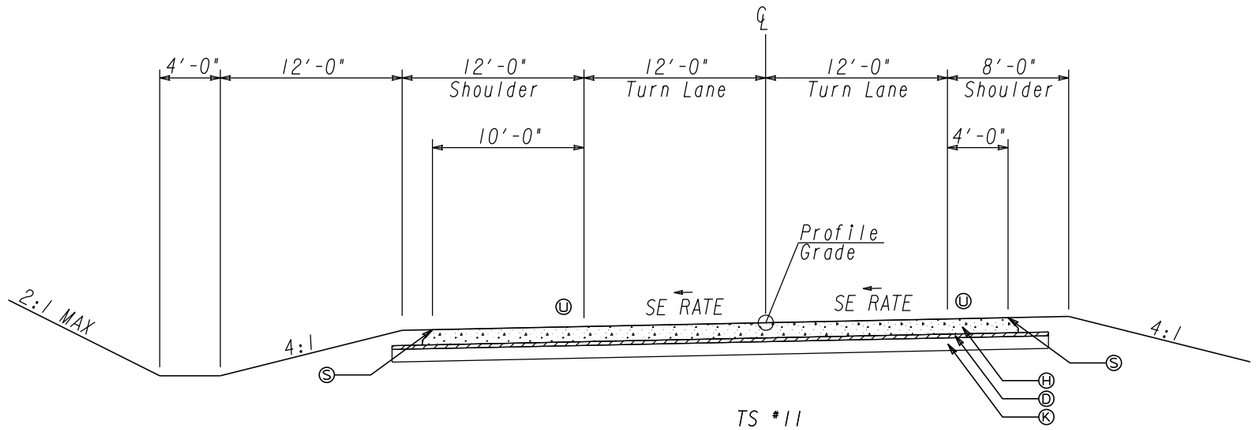

TS #11
I-20 WB Off Ramp
SUPERELEVATION SECTION
STA. 600+24.74 TO STA. 601+25.00

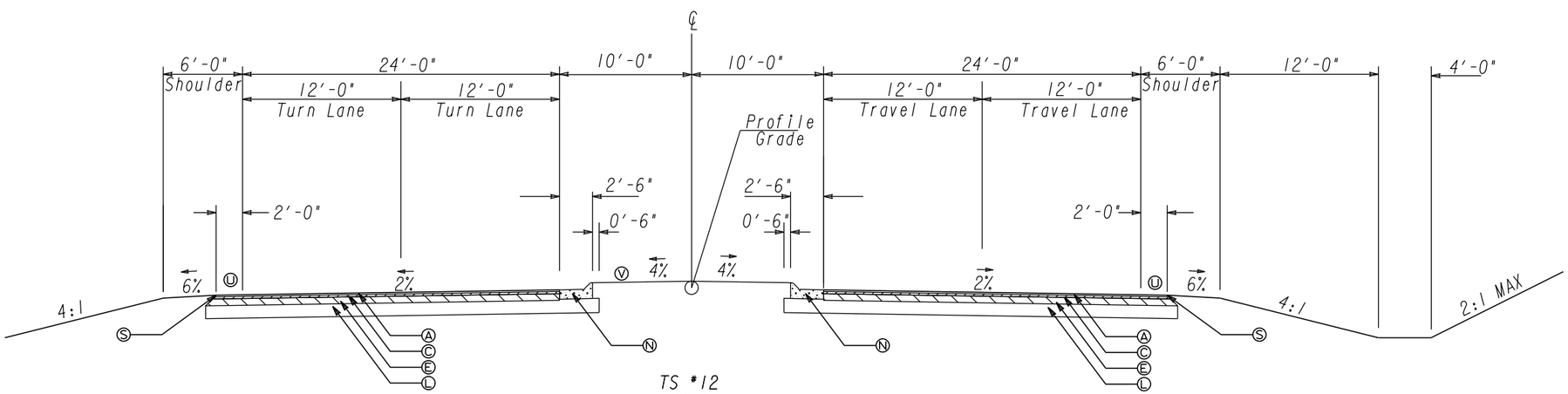

TS #12
DW 1
TANGENT SECTION
STA. 200+19.00 TO STA. 201+50.00

GDOT Georgia Department of Transportation

ARCADIS Design & Consultancy for natural and built assets
Michael Baker INTERNATIONAL

NTS

REVISION DATES

TYPICAL SECTIONS
US 278 / SR 12

CHECKED: DATE:
BACKCHECKED: DATE:
CORRECTED: DATE:
VERIFIED: DATE:

DRAWING No.
05-0006

GPLN-CE

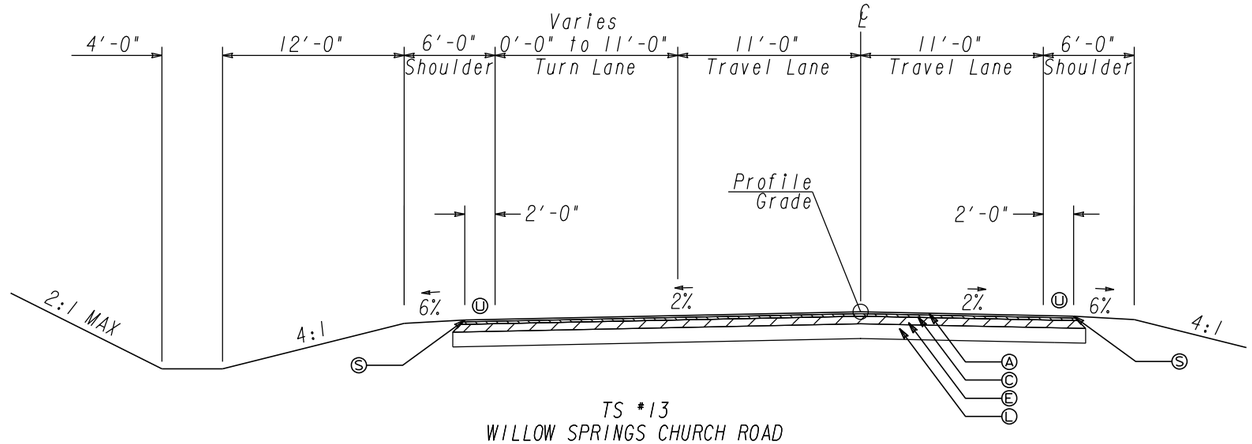

TS #13
WILLOW SPRINGS CHURCH ROAD
TANGENT SECTION
STA. 300+18.20 TO STA. 311+50.00

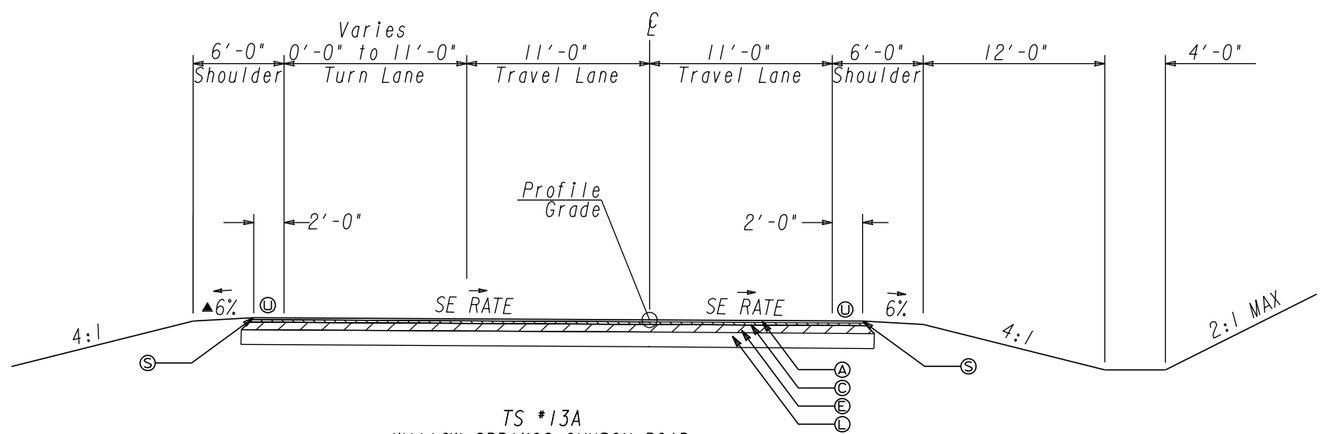

TS #13A
WILLOW SPRINGS CHURCH ROAD
SUPERELEVATION SECTION

▲ NORMAL SHOULDER SLOPE, NOT TO EXCEED MAXIMUM SHOULDER BREAKOVER OF 8%.

GDOT Georgia Department of Transportation

ARCADIS Design & Consultancy for natural and built assets
Michael Baker INTERNATIONAL

NTS

REVISION DATES

TYPICAL SECTIONS
US 278 / SR 12

CHECKED:		DATE:	
BACKCHECKED:		DATE:	
CORRECTED:		DATE:	
VERIFIED:		DATE:	

DRAWING No.
05-0007

GPLN-CE

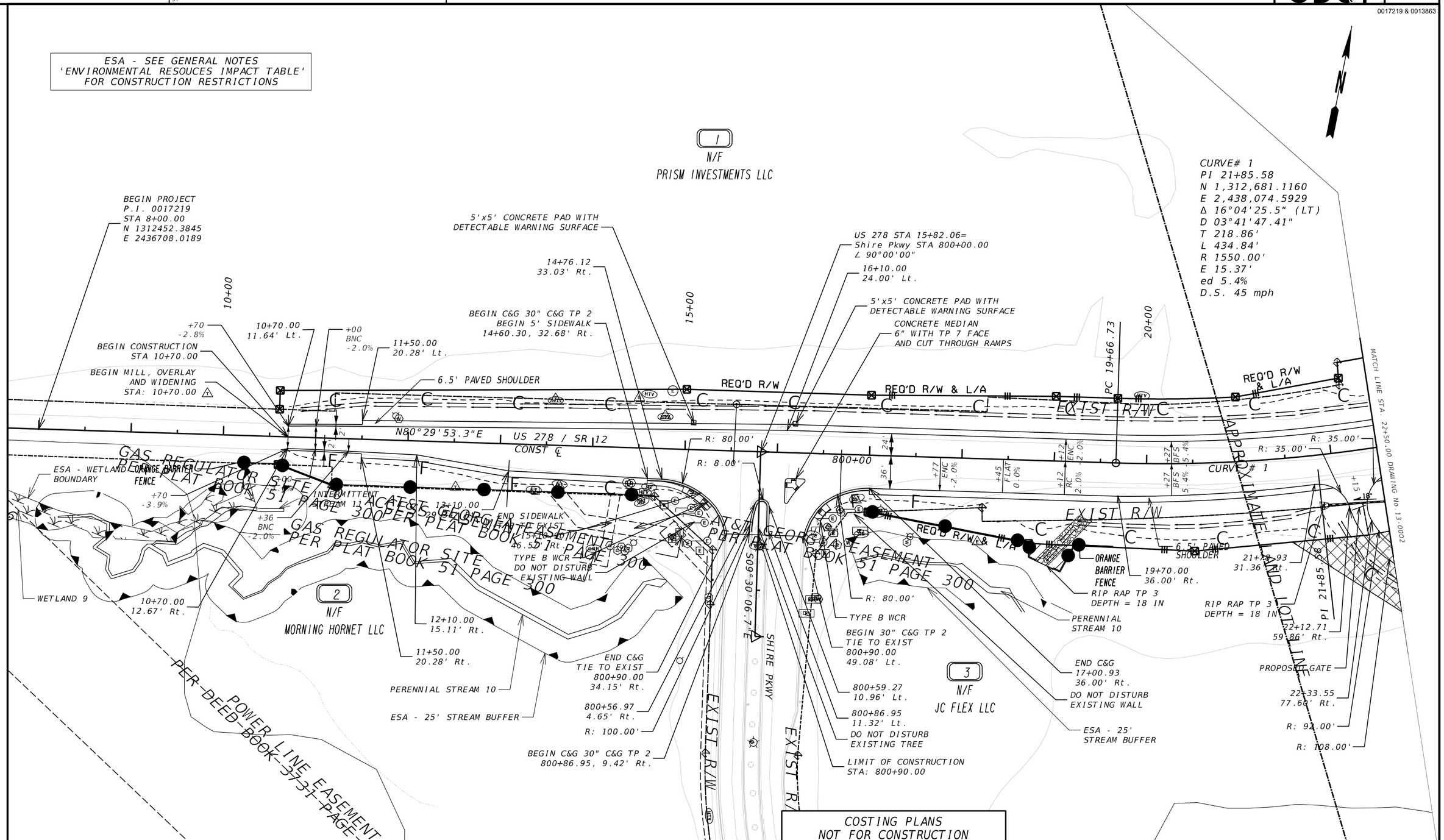

PROPERTY AND EXISTING R/W LINE	
REQUIRED R/W LINE	
CONSTRUCTION LIMITS	
EASEMENT FOR CONSTR & MAINTENANCE OF SLOPES	
EASEMENT FOR CONSTR OF SLOPES	
EASEMENT FOR CONSTR OF DRIVES	

BEGIN LIMIT OF ACCESS	BLA
END LIMIT OF ACCESS	ELA
EXISTING LIMIT OF ACCESS	
REQ'D LIMIT OF ACCESS	
EXISTING LIMIT OF ACCESS & R/W	
REQ'D LIMIT OF ACCESS & R/W	
ORANGE BARRIER FENCE	
ESA - ENV. SENSITIVE AREA	

GDOT Georgia Department of Transportation

COSTING PLANS
NOT FOR CONSTRUCTION

ARCADIS Design & Consultancy for natural and built assets
Michael Baker INTERNATIONAL

SCALE IN FEET
0 50 100 200

REVISION DATES

CONSTRUCTION PLAN
US 278 / SR 12

CHECKED:		DATE:	
BACKCHECKED:		DATE:	
CORRECTED:		DATE:	
VERIFIED:		DATE:	

DRAWING No.
13-0001

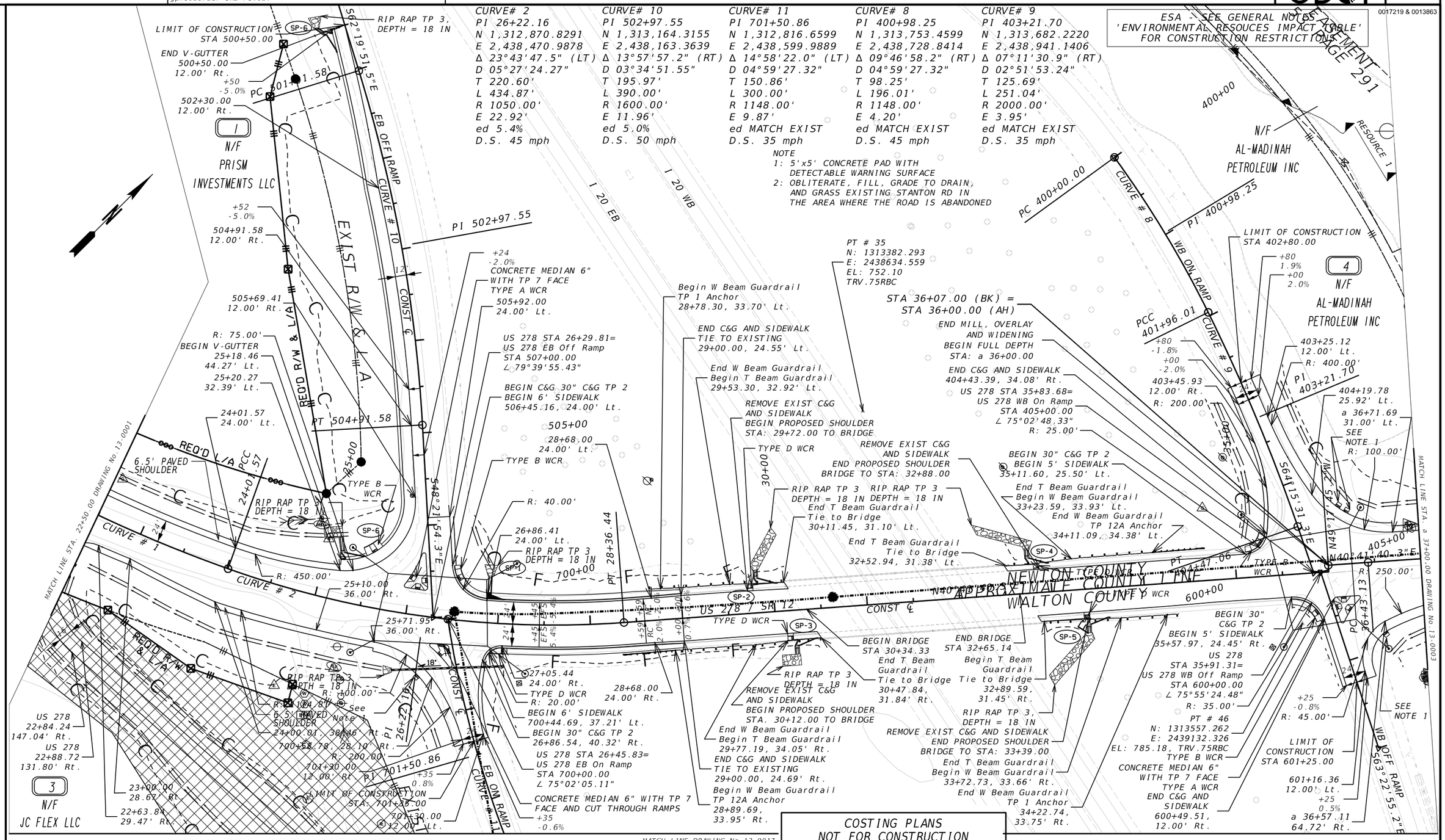

COSTING PLANS
NOT FOR CONSTRUCTION

PROPERTY AND EXISTING R/W LINE	
REQUIRED R/W LINE	
CONSTRUCTION LIMITS	
EASEMENT FOR CONSTR & MAINTENANCE OF SLOPES	
EASEMENT FOR CONSTR OF SLOPES	
EASEMENT FOR CONSTR OF DRIVES	
BEGIN LIMIT OF ACCESS	BLA
END LIMIT OF ACCESS	ELA
EXISTING LIMIT OF ACCESS	
REQ'D LIMIT OF ACCESS	
EXISTING LIMIT OF ACCESS & R/W	
REQ'D LIMIT OF ACCESS & R/W	
ORANGE BARRIER FENCE	
ESA - ENV. SENSITIVE AREA	

GDOT Georgia Department of Transportation

ARCADIS Design & Consultancy for natural and built assets
Michael Baker INTERNATIONAL

SCALE IN FEET 0 50 100 200

REVISION DATES

CONSTRUCTION PLAN
US 278 / SR 12

CHECKED: DATE:
BACKCHECKED: DATE:
CORRECTED: DATE:
VERIFIED: DATE:

DRAWING No. 13-0002

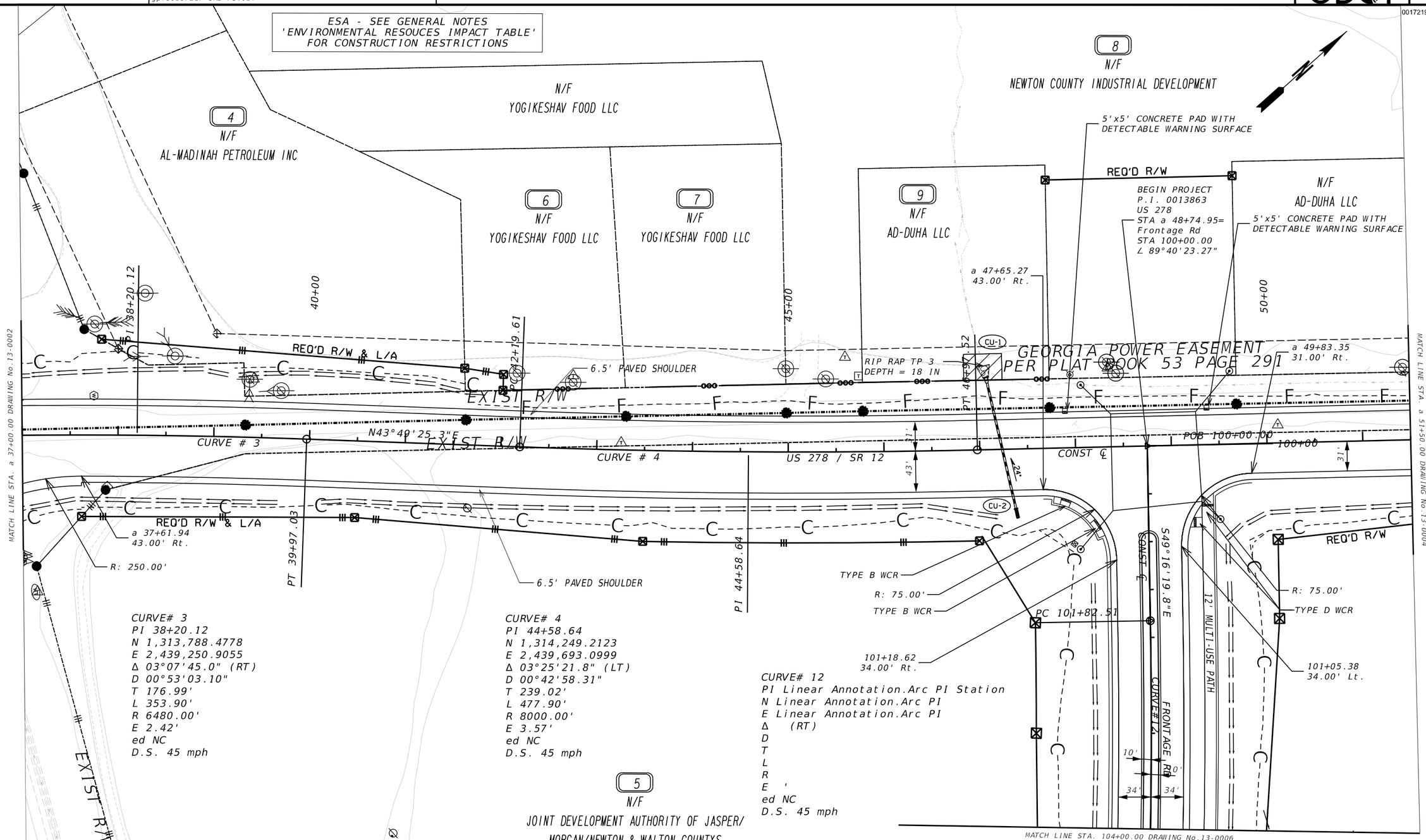

COSTING PLANS
NOT FOR CONSTRUCTION

PROPERTY AND EXISTING R/W LINE	
REQUIRED R/W LINE	
CONSTRUCTION LIMITS	C F
EASEMENT FOR CONSTR & MAINTENANCE OF SLOPES	
EASEMENT FOR CONSTR OF SLOPES	
EASEMENT FOR CONSTR OF DRIVES	

BEGIN LIMIT OF ACCESS	BLA
END LIMIT OF ACCESS	ELA
EXISTING LIMIT OF ACCESS	
REQ'D LIMIT OF ACCESS	
EXISTING LIMIT OF ACCESS & R/W	
REQ'D LIMIT OF ACCESS & R/W	
ORANGE BARRIER FENCE	
ESA - ENV. SENSITIVE AREA	

GDOT Georgia Department of Transportation

ARCADIS Design & Consultancy for natural and built assets
Michael Baker INTERNATIONAL

SCALE IN FEET
0 50 100 200

REVISION DATES

CONSTRUCTION PLAN
US 278 / SR 12

CHECKED:		DATE:	
BACKCHECKED:		DATE:	
CORRECTED:		DATE:	
VERIFIED:		DATE:	

DRAWING No.
13-0003

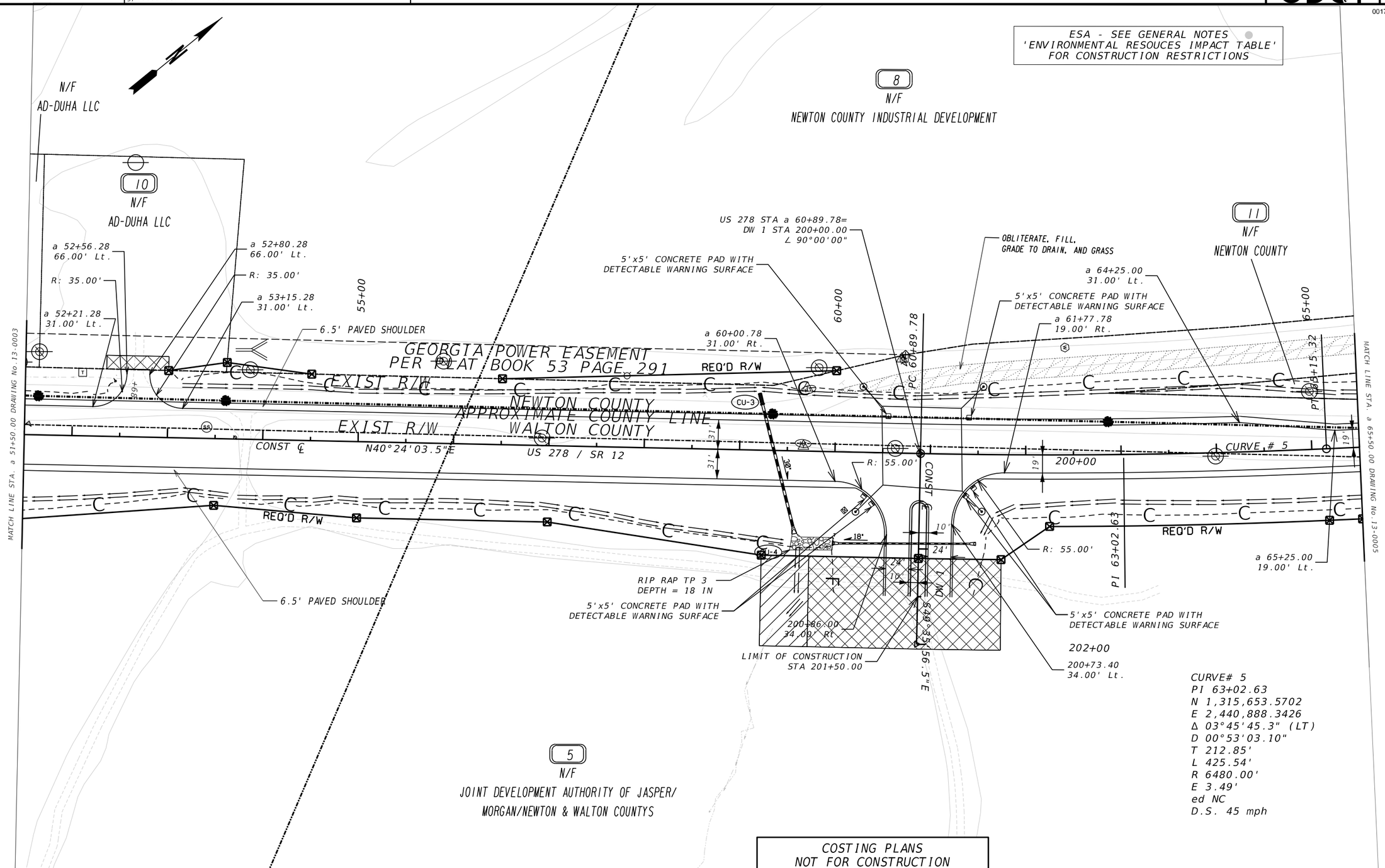

CURVE# 5
PI 63+02.63
N 1,315,653.5702
E 2,440,888.3426
Δ 03°45'45.3" (LT)
D 00°53'03.10"
T 212.85'
L 425.54'
R 6480.00'
E 3.49'
ed NC
D.S. 45 mph

COSTING PLANS
NOT FOR CONSTRUCTION

PROPERTY AND EXISTING R/W LINE	
REQUIRED R/W LINE	
CONSTRUCTION LIMITS	C F
EASEMENT FOR CONSTR & MAINTENANCE OF SLOPES	
EASEMENT FOR CONSTR OF SLOPES	
EASEMENT FOR CONSTR OF DRIVES	

BEGIN LIMIT OF ACCESS	BLA
END LIMIT OF ACCESS	ELA
EXISTING LIMIT OF ACCESS	
REQ'D LIMIT OF ACCESS	
EXISTING LIMIT OF ACCESS & R/W	
REQ'D LIMIT OF ACCESS & R/W	
ORANGE BARRIER FENCE	
ESA - ENV. SENSITIVE AREA	

GDOT Georgia Department of Transportation

ARCADIS Design & Consultancy for natural and built assets
Michael Baker INTERNATIONAL

SCALE IN FEET
0 50 100 200

REVISION DATES

CONSTRUCTION PLAN
US 278 / SR 12

CHECKED:		DATE:	
BACKCHECKED:		DATE:	
CORRECTED:		DATE:	
VERIFIED:		DATE:	

DRAWING No.
13-0004

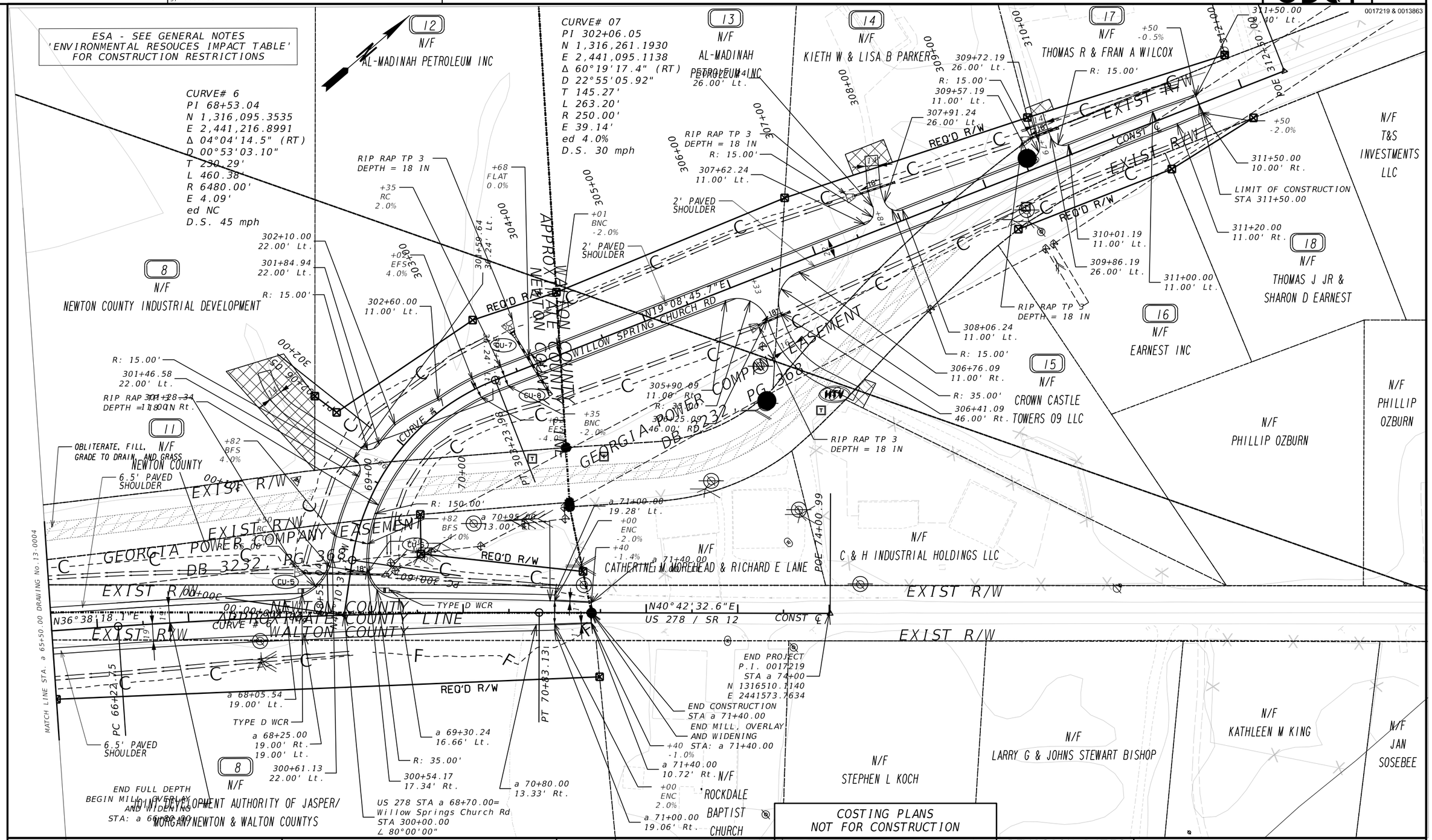

PROPERTY AND EXISTING R/W LINE	BEGIN LIMIT OF ACCESS.....BLA
REQUIRED R/W LINE	END LIMIT OF ACCESS.....ELA
CONSTRUCTION LIMITS	EXISTING LIMIT OF ACCESS
EASEMENT FOR CONSTR & MAINTENANCE OF SLOPES	REQ'D LIMIT OF ACCESS
EASEMENT FOR CONSTR OF SLOPES	EXISTING LIMIT OF ACCESS & R/W
EASEMENT FOR CONSTR OF DRIVES	REQ'D LIMIT OF ACCESS & R/W
	ORANGE BARRIER FENCE
	ESA - ENV. SENSITIVE AREA

GDOT
Georgia Department of Transportation

ARCADIS Design & Consultancy for natural and built assets
Michael Baker INTERNATIONAL

COSTING PLANS
NOT FOR CONSTRUCTION

SCALE IN FEET
0 50 100 200

REVISION DATES

CONSTRUCTION PLAN
US 278 / SR 12

CHECKED:		DATE:	
BACKCHECKED:		DATE:	
CORRECTED:		DATE:	
VERIFIED:		DATE:	

DRAWING No.
13-0005

Attachment 4 – PCSR

PRECONSTRUCTION STATUS REPORT

PROJ ID	COUNTY	DESCRIPTION
0017219	Newton	SR 12 FROM WILLOW SPRINGS CHURCH RD TO SHIRE PKWY

Mgmt Let Date:

¿ South of I-20, US 278 shall be widened to a to a three-lane section with required turn lanes.

¿ North of I-20, US 278 shall be widened to a five-lane section consisting of four travel lanes, a 14-foot flush median (two way left turn lane), and rural shoulders, , including intersection improvements at the I-20 ramp terminals at US 278

PROJ NO:		**SPONSOR:**	GDOT
MPO TIP#:		**PROJ MGR:**	Ahmed, Kathe
MPO:	Not Urban	**DOT DIST:**	2
PROJ LENGTH (MI):	0.83	**CONG DIST:**	010
TYPE WORK:	Widening	**HOUSE DIST:**	112
LET RESPONSIBILITY:	GDOT Let	**SENATE DIST:**	017
BIKE PROVISIONS INCLUDED?	N		

Phase	FY Approved	Approved FY Estimate*	Fund	Phase Status
Engineering	2022	$1,470,000.00	HB170	AUTHORIZED
Utility	2022	$225,000.00	HB170	PRECST
Construction	2023	$23,600,000.00	HB170	PRECST
Engineering	2023	$630,000.00	HB170	PRECST
Utility	2023	$675,000.00	HB170	PRECST
Right of Way	2022	$4,320,000.00	HB170	AUTHORIZED
Right of Way	2023	$6,480,000.00	HB170	PRECST
Engineering	2020	0.00	HB170	AUTHORIZED

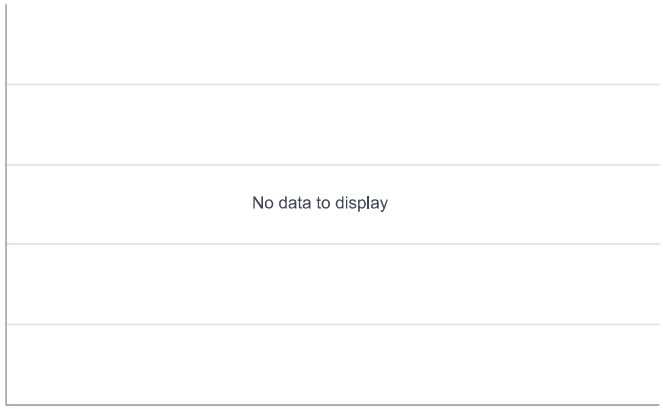

Activity	Actual Start Date	Actual Finish Date

Right of Way Acquisition Information:

Preliminary Parcel Count: **Total Parcel Count:** 15 **Acquired by :** DOT

Attachment 5 – PES Waiver (Email Correspondence)

Karmungi, Harish

From: Denning, Tyler
Sent: Wednesday, July 6, 2022 10:48 AM
To: Karmungi, Harish
Subject: FW: Project Adventure - Pavement Evaluation

Waiver of PES

Tyler Denning PE
Transportation Group Leader
Arcadis U.S., Inc.

ARCADIS
2839 Paces Ferry Rd, Suite 900 | Atlanta, GA | 30339 | USA
T +1 770 384 6552
M +1 404 245 7272
www.arcadis.com

From: Langley, Jonathan <Jonathan.Langley@arcadis.com>
Sent: Friday, May 13, 2022 7:32 AM
To: Angela Alexander <aalexander@HNTB.com>; Denning, Tyler <Tyler.Denning@arcadis.com>
Cc: Nicholas Castronova <ncastronova@hntb.com>; Clowers, Marlo <mclowers@dot.ga.gov>; Ahmed, Kathe (KAhmed@dot.ga.gov) <KAhmed@dot.ga.gov>
Subject: RE: Project Adventure - Pavement Evaluation

Angela,

Understood. Thank you for getting us this information. I'm copying @Denning, Tyler on this email so he can document this, as noted below.

Thanks,
Jonathan Langley P.E.
Project Manager
Arcadis U.S., Inc.
2839 Paces Ferry Road, Suite 900 | Atlanta, GA | 30339 | USA
M +1 770 547 0553
www.arcadis.com

Professional Engineer / PE-GA, PE035657

From: Angela Alexander <aalexander@HNTB.com>
Sent: Thursday, May 12, 2022 2:12 PM

To: Langley, Jonathan <Jonathan.Langley@arcadis.com>
Cc: Nicholas Castronova <ncastronova@hntb.com>; Clowers, Marlo <mclowers@dot.ga.gov>; Ahmed, Kathe (KAhmed@dot.ga.gov) <KAhmed@dot.ga.gov>
Subject: RE: Project Adventure - Pavement Evaluation

Jonathan,

Just talked to Andrew, Marlo and Kathe and they agreed we can document the decision to not do a Pavement Evaluation in the Concept Report. This may be something we can mention at the Comment Resolution meeting as well if need be. Please let me know if there are any concerns with this path forward.

Thanks

Angela T. Alexander
Sr. Project Manager
Tel (470) 351-6320

ARCADIS
Cell (470) 373-3123
Email aalexander@hntb.com

HNTB CORPORATION
CELEBRATING 50 YEARS IN ATLANTA
191 Peachtree Street, NE | Atlanta, GA 30303 | hntb.com

100+ YEARS OF INFRASTRUCTURE SOLUTIONS

From: Langley, Jonathan <Jonathan.Langley@arcadis.com>
Sent: Thursday, May 12, 2022 11:17 AM
To: Angela Alexander <aalexander@HNTB.com>
Cc: Nicholas Castronova <ncastronova@HNTB.com>
Subject: FW: Project Adventure - Pavement Evaluation

Here is the email chain we were working on with Wayne.

Thanks,
Jonathan Langley P.E.
Project Manager
Arcadis U.S., Inc.
2839 Paces Ferry Road, Suite 900 | Atlanta, GA | 30339 | USA
M +1 770 547 0553
www.arcadis.com

Professional Engineer / PE-GA, PE035657

From: Clowers, Marlo <mclowers@dot.ga.gov>
Sent: Friday, April 22, 2022 6:27 PM
To: Wayne Mote <wmote@HNTB.com>; Ahmed, Kathe <KAhmed@dot.ga.gov>
Cc: Denning, Tyler <Tyler.Denning@arcadis.com>; Stevens, Robin <Robin.Stevens@arcadis.com>; Switzer, Lauran

<Jessica.Switzer@arcadis.com>; Langley, Jonathan <Jonathan.Langley@arcadis.com>; Anton Sova <asova@hntb.com>; Nicholas Castronova <ncastronova@hntb.com>; Clowers, Marlo <mclowers@dot.ga.gov>
Subject: RE: Project Adventure - Pavement Evaluation

Wayne,

Based on bullets 1, 5 and 7 in the email below. I am in agreement with your recommendation. Thanks

Marlo

From: Wayne Mote <wmote@HNTB.com>
Sent: Friday, April 22, 2022 5:44 PM
To: Clowers, Marlo <mclowers@dot.ga.gov>; Ahmed, Kathe <KAhmed@dot.ga.gov>
Cc: Denning, Tyler <Tyler.Denning@arcadis.com>; Stevens, Robin <Robin.Stevens@arcadis.com>; Switzer, Lauran <Jessica.Switzer@arcadis.com>; Langley, Jonathan <Jonathan.Langley@arcadis.com>; Anton Sova <asova@hntb.com>; Nicholas Castronova <ncastronova@hntb.com>
Subject: RE: Project Adventure - Pavement Evaluation

Marlo and Kathe,

The PMC is in support of this.

This sat in my court too long (my fault), so any help in a speedy decision would be great.

Glad to discuss.

Thanks.

Wayne.

From: Langley, Jonathan
Sent: Thursday, March 31, 2022 10:40 AM
To: wmote@HNTB.com
Cc: Denning, Tyler <Tyler.Denning@arcadis.com>; Stevens, Robin <Robin.Stevens@arcadis.com>; Switzer, Lauran <Jessica.Switzer@arcadis.com>
Subject: Project Adventure - Pavement Evaluation

Good Morning Wayne,

This email is to present the possibility of removing pavement evaluations from the Project Adventure scope. The following points are based on coordination discussions between GEC and PMC:

- Pavement is only being retained on US 278 to the south of the bridge over I-20 (approx. 2300 feet). Full depth replacement is assumed in all other locations.
- Proposed construction in this area is limited to minor intersection improvements and tying the typical section back to existing while also connecting to Shire Parkway.
- Traffic volumes in this segment of roadway are not anticipated to increase significantly since the majority of new traffic will be to the north towards the Stanton Springs North Development.
- Cursory review of the existing pavement condition (Google Earth) shows that the existing pavement is in good shape.

- If a PES were to reveal that the pavement south of I-20 was deficient, a large portion of US 278 would need to be replaced beyond the area of concern for this project. This type of effort should be absorbed in another project and/or maintenance work.
- The US 278 bridge over I-20 was constructed in 2003 and it is believed the existing pavement was installed at the same time.
- Based on comments by the Chief Engineer, GDOT is open to programming a future project that would upgrade the US 278 bridge and adjacent facilities if this is required.

For these reasons, we understand that a pavement evaluation may not need to be performed for Project Adventure to address our primary scope. This initial topic was raised to us through conversations with PMC and after discussions around the bullets above, we are open to removing this scope.

We are prepared to discuss this with Marlo in order to ensure that GDOT would be in agreement with this approach.

Thank you,

Jonathan Langley P.E.
Project Manager
Arcadis U.S., Inc.
2839 Paces Ferry Road, Suite 900 | Atlanta, GA | 30339 | USA
M +1 770 547 0553
www.arcadis.com

Professional Engineer / PE-GA, PE035657

This email and any files transmitted with it are the property of Arcadis and its affiliates. All rights, including without limitation copyright, are reserved. This email contains information that may be confidential and may also be privileged. It is for the exclusive use of the intended recipient(s). If you are not an intended recipient, please note that any form of distribution, copying or use of this communication or the information in it is strictly prohibited and may be unlawful. If you have received this communication in error, please return it to the sender and then delete the email and destroy any copies of it. While reasonable precautions have been taken to ensure that no software or viruses are present in our emails, we cannot guarantee that this email or any attachment is virus free or has not been intercepted or changed. Any opinions or other information in this email that do not relate to the official business of Arcadis are neither given nor endorsed by it.

This e-mail and any files transmitted with it are confidential and are intended solely for the use of the individual or entity to whom they are addressed. If you are NOT the intended recipient and receive this communication, please delete this message and any attachments. Thank you.

Georgia is a state of natural beauty. And it's a state that spends millions each year cleaning up litter that not only mars that beauty, but also affects road safety, the environment and the economy. Do your part – don't litter. How can you play an active role in protecting the splendor of the Peach State? Find out at http://keepgaclean.com/.

This email and any files transmitted with it are the property of Arcadis and its affiliates. All rights, including without limitation copyright, are reserved. This email contains information that may be confidential and may also be privileged. It is for the exclusive use of the intended recipient(s). If you are not an intended recipient, please note that any form of distribution, copying or use of this communication or the information in it is strictly prohibited and may be unlawful. If you have received this communication in error, please return it to the sender and then delete the email and destroy any copies of it. While reasonable precautions have been taken to ensure that no software or viruses are present in our emails, we cannot guarantee that this email or any attachment is virus free or has not been intercepted or changed. Any opinions or other information in this email that do not relate to the official business of Arcadis are neither given nor endorsed by it.

This e-mail and any files transmitted with it are confidential and are intended solely for the use of the individual or entity to whom they are addressed. If you are NOT the intended recipient and receive this communication, please delete this message and any attachments. Thank you.